International

AiRTX

The Air Research Technology Company

Catalog #30

COMPRESSED AIR PRODUCTIVITY TOOLS

From the Air Research Technology Company

COOLING/HEATING

NEMA 4/12
STAINLESS STEEL /ALUMINUM
CABINET COOLER

c UL US LISTED

NEMA 4X STAINLESS STEEL
CABINET COOLER

AIR AMPLIFICATION

INDUSTRIAL AIR KNIFE

ADJUSTABLE AIR
SAVER NOZZLE

HURRICANE 4 INCH
AIR SAVER WEDGE

STATIC CONTROL

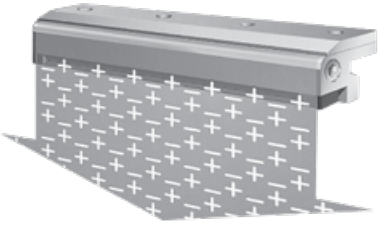

IONIZING AIR KNIFE

INDUSTRIAL VACUUM SYSTEM

DRUM DEVIL KIT

Free Engineering Help

Will it work … have I sized the product correctly… will it tolerate factory conditions? We expect questions from you.

If you haven't used one of our products before, we don't want you left guessing.

Our experienced application engineers are ready to walk you through to a solution that works the first time.

Guarantee

It's absolutely free, and you're under no obligation. In fact, if it doesn't work for you, return the product within 30 days for complete credit and no restocking charges. It's guaranteed!

Our toll-free Air Line is manned from 8:30 a.m. to 5:00 p.m. Eastern Standard Time. During off hours, please leave a voice-mail message and we'll call ASAP.

Technical questions can also be emailed to **http://www.airtx.com**

Credit Policy

Normal terms are net 30 days. There is no minimum order. Mastercard and Visa and Amex accepted.

Five Year Warranty

AiRTX warrants its products against defects in material and workmanship for 5 years from the date of purchase and 1 year on electrical products.

We design and manufacture our products. As an OEM you may have a better idea or new product idea we haven't tried. Give us a call. You will find us very glad to listen.

Call the AiRTX Air Line
for Free Technical Support
1-800-307-7475
E-mail Us at
sales@airtx.com
Visit Our Website at
airtx.com

AiRTX International
6320 Wiehe Road
Cincinnati, OH 45237

Phone: 513-631-0660
Fax: 513-631-3111
www.airtx.com

© Copyright 2016 AiRTX International

AiRTX International application engineers provide technical assistance at no charge. However, AiRTX International assumes no obligation or liability for the information provided or the results obtained by the customer.

Technical Drawings Not Actual Size

CONTENTS

CONVERSION TABLES

LENGTH			
Centimeters- cm.	x	0.394	= Inches
Feet- ft.	x	30.48	= Centimeters
	x	0.3048	= Meters
Inches-in.	x	2.54	= Centimeters
Inches-in.	x	0.254	= Milimeters
Meters-m	x	3.281	= Feet
	x	39.37	= Inches
Cubic centimeters cu cm or cm3	x	0.06102	= Cubic Inches
Cubic Feet - cu ft.	x	28320	= Cubic centimeters
Cubic Inches- cu in.	x	16.29	= Cubic centimeters
Kilograms-kg	x	2.205	= Pounds
Pounds- lb	x	453.6	= Grams
FLOW RATE			
1.000 SCFM	x	2.857	x 1 Nl/min

FROM TO	lit/sec	gal/min	ft3/sec	ft3/min
lit/sec	1	15.85	0.0353	2.119
gal/ min	0.0631	1	0.00223	0.1337
ft3/sec	28.32	448.8	1	60
ft3/min	0.4719	7.481	0.0167	1

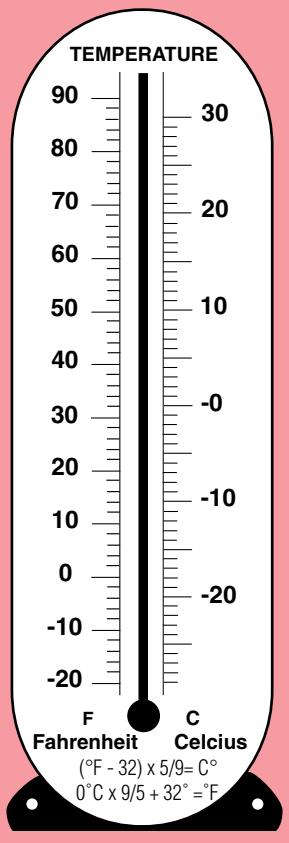

Call the AiRTX Air Line
for Free Technical Support
1-800-307-7475
E-mail Us at
sales@airtx.com
Visit Our Website at
airtx.com

COOLING Page

Samples of Industrial Applications 2-3
Stainless Steel Vortex Tubes 4-7
Stainless Steel Air Guns 8-11
Stainless Steel and Aluminum Cabinet Coolers 12
(Heavy-Gauge SS Construction for the Price of our Competitors Aluminum Coolers!)
Turnkey Cabinet Cooling Enclosure/Mounting Elbow 13
Installation and Sizing of Cabinet Coolers 14-15

AIR AMPLIFICATION

AiRTX Air Amplification 16-17
Air Knives 18-20
AiRTX Gate Air Wipes 21
Hurricane Air Amplifiers 22-23
Adjustable High Thrust Jets 24
Hurricane Air Saver Wedge 25
Hurricane Air Saver Force Nozzle 26
Hurricane Adjustable Air Saver Nozzles 27
Adjustable Flare Nozzle and RubberTip Nozzle 28
Fixed Flow Air Saver Nozzle and 1/2" Fixed Flow Nozzle 29
Air Saver Blow Guns 30
Sta-Put Hoses 31
Manifolds 32

STATIC ELIMINATION

Static Elimination 33
Power Supply 34
Ionizing Bar 35-37
Ionizing Bar with Air Curtain 38
Ionizing Air Gun and Single Point Nozzles 39

VACUUM SYSTEMS

SmartVac 40
Drum Devil Systems 41
SpeedVac/HoleVac 42
ConveyVac 43
HopperVac 44

ACCESSORIES

Accessories 45

"Why Pay More Than You Have To?"

Just Look At The Variety And Samples Of Applications And Numerous Industries Using AiRTX Products

AUTOMOTIVE	AIRTX PRODUCT	Model	Page
To cool spot welding operations	Vortex Tube	20025	4
To remove dust and water from components	Hurricane Air Knife	86024	18
To convey paper scrap from assembly operation	Hurricane Air Amplifier	15015	22
To cool tapping operations and threading operations	Air Gun	60015	8
Static elimination of painted surfaces	Ionizing Bar	55024	35
CHEMICALS			
To cool gas samples	Vortex Tube	20015	4
To cool electronic controls	Polar Cabinet Cooler	70325x	12
To remove fumes	Hurricane Air Amplifier	38038	22
Dry powder station clean up	StrongMan SmartVac	99755	40
Clean up spill	DrumDevil II	90650	41
ELECTRONICS			
To cool electronic controls	Polar Cabinet Cooler	70315	12
To cool soldering operation on PC boards	Air Gun	60015	8
To freeze PC board for testing	Vortex Tube	20015	4
To cool boards after soldering operation	Hurricane Air Amplifier	15008	22
To remove static on a variety of operations	Ionizing Air Knife	55512	38
FOOD PROCESSING			
To clean conveyor belt in candy plant	Hurricane Air Knife	86018	18
To blow sugar out of containers	Hurricane Air saver Force Nozzle	48107	29
To eliminate static on plastic bags in packaging	Ionizing Air Knife	55524	38
To blow-off cans in washing operation	High Thrust Jet	38038	24
To remove scrap in chicken processing plant	Hurricane Air Amplifier	10025	22
METAL WORKING			
To blow away chips from milling operation	Hurricane Wedge	38150	25
To remove griding dust from surface grinder	Hurricane Air Amplifier	10025	22
To cool parts coming out of a powder coating process	Air Knife	85036	19
To cool spot welding operations	Vortex Tube	20015	4
To cool tool band saw operation	Air Gun	60040	8

APPLICATIONS

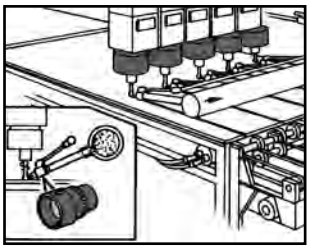

VACUUM AIR AMPLIFIER

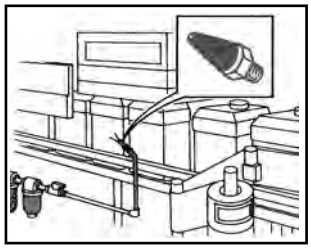

COOLING AIR NOZZLE

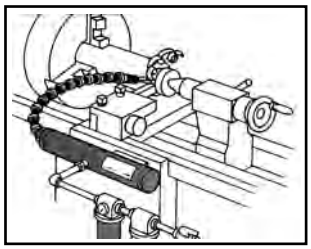

PLASTIC COOLING

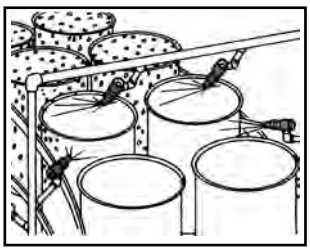

DRYING AIR JET

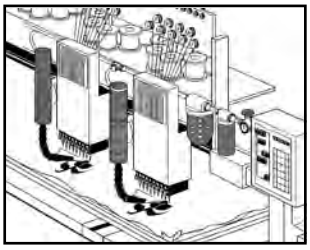

NEEDLE COOLING AIR GUN

"Saving Air With AiRTX Products"

Hundreds Of Applications To Save Money On Compressed Air Cost And Still Increase Productivity

METAL WORKING cont	AIRTX PRODUCT	Model	Page
To cool tapping operation of metal chips	Vortex Tube	20015	4
To eject stamped parts out of die	Air Nozzle	48005	26
To vacuum chips out of the bed of a machine	Speed vac	90400	42
To remove fumes from paint cabinets	Air Jet	38044	24
To cool CNC controls of machining center	Cabinet Cooler	70315	12
PLASTICS			
To cool plastic parts in a conveyor belt	Vortex Tube	20015	4
Clean up sumps of hydraulic fluid and sludge	DrumDevil	90650	41
To blow plastic chips away from milling operation	Sta-Put Hose with Blow Gun	40001-8 48312	31
Loads pellets into hopper feeder	HopperVac	95308	44
To dry plastic parts on conveyor line	Air Gun	60015	8
PRINTING			
To cool computer control	Polar Cabinet Cooler	70035	12
To hold paper in place after it exits from press	Hurricane Air Knife	86036	18
To dry book binding operation	SlimLine Air Knife	82012	20
To cool hot melt glue operation	Vortex Tube	20015	4
Eliminate static on plastic sheets	Ionizing Bar	55024	35
TEXTILES			
To remove scrap material from sewing operation	Huricane Wedge	38150	25
To cool embroidering heads to prevent thread burning	Air Gun	60051	8
To cool and dry large rolls of cloth	Air Knife	85012	19
To remove scrap from edge trim operation	Hurricane Air Amplifier	15025	22
To cool needle on sewing machine	Vortex Tube	20025	4
WOODWORKING			
To cool router operation to prevent burning of wood	Air Gun	60015	8
To vacuum saw dust generated from a router	Hurricane Air Amplifier	15008	22
To clean up around wood working machines	StrongMan SmartVac	99755	40
Protect electronic controls from dust	Polar Cabinet Cooler	70325	12
To improve central vacuum systems	StrongMan Convey Vac	98108	43

APPLICATIONS

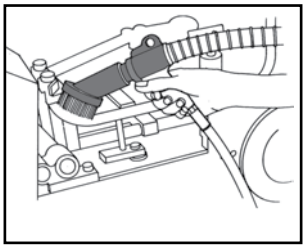

CLEAN-UP SPEEDVAC

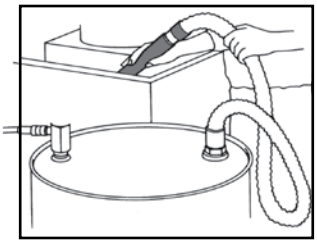

LIQUID HANDLING DRUMDEVIL

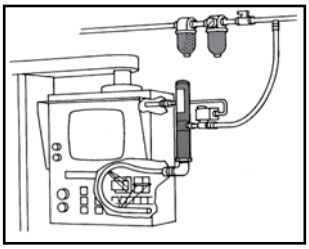

COOLING CABINET COOLER

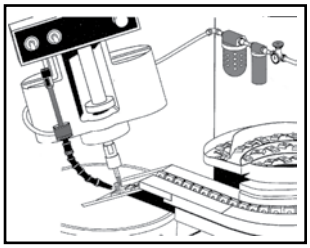

STAMPING VORTEX TUBE

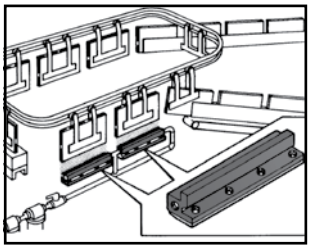

COOLING AIR KNIFE

AiRTX Stainless Steel Vortex Tubes

Instant Cold Air — to -40°F — for Industrial Spot Cooling, or Hot Air — to 230°F for Heating, from Ordinary Compressed Air!

▲ **What is a Vortex Tube?** *It's your answer for instant cold air, where and when you need it, using nothing but compressed air as a power source. There's no maintenance, no mess, no explosion hazard, no electricity, no moving parts — just clean, cold air for industrial or laboratory spot cooling.*

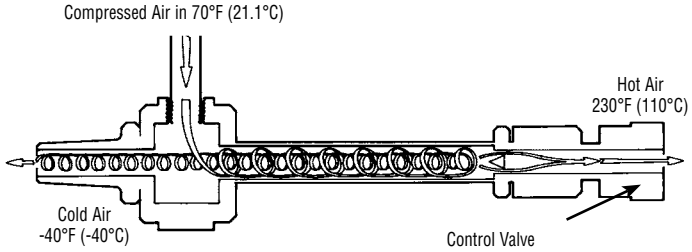

Vortex Tube Performance Data

Inlet Pressure psiG	Cold Fraction % 20	30	40	50	60	70	80
20	61.5	59.5	55.5	50.5	43.5	36.0	27.5
	14.5	24.5	36.0	49.5	64.0	82.5	107.0
40	88.0	85.0	80.0	73.0	62.5	51.5	38.0
	20.5	35.0	51.5	71.0	91.5	117.0	147.0
60	104.0	100.0	93.0	84.0	73.0	59.5	44.5
	23.5	40.0	58.5	80.0	104.0	132.0	168.0
80	115.0	110.0	102.0	92.0	80.0	65.5	49.0
	25.0	43.0	63.0	86.0	113.0	143.0	181.0
100	123.0	118.0	110.0	99.0	86.0	70.5	53.0
	26.0	45.0	66.5	91.0	119.0	151.0	192.0
120	129.0	124.0	116.0	104.0	90.5	74.0	55.0
	26.0	46.0	69.0	94.0	123.0	156.0	195.0
140	135.0	129.0	121.0	109.0	94.0	76.0	56.5
	25.5	46.0	70.5	96.0	124.0	156.0	193.0

Figures in pink area give temperature drop of cold air, °F

Figures in grey area give temperature rise of hot air, °F

How Does a Vortex Tube Work?

How **can** you get cold air and hot air from one compressed air stream? Lots of people have tried to explain it, including the French physicist who invented the Vortex Tube in the 1930's, Georges Ranque. Many different theories have been put forward.

Vortex Tubes behave in a very predictable and controllable way. When compressed air is released into the tube through the Vortex Generator, you get hot air out of one end of the tube and cold air out the other. A small valve in the hot end, adjustable with the handy control knob, lets you adjust the volume and temperature of air released from the cold end.

The Vortex Generator — an interchangeable, stationary part — regulates the volume of compressed air, allowing you to alter the air flows and temperature ranges you can produce with the tube.

"Cold Fraction": an Important Term for Understanding Vortex Tube Performance

"Cold fraction" is the percentage of input compressed air that's released through the cold end of the tube. As a rule of thumb, the less cold air you release, the colder the air will be. You adjust the cold fraction with the control knob. Cold fraction is also a function of the type of vortex generator that's in the tube, i.e., a "high cold fraction" or "low cold fraction" generator.

Most industrial process applications use a high cold fraction (above 50%). A high cold fraction tube can easily give you cold outputs 50-90°F (28-50°C) **below** your compressed air temperature. High cold fractions give you a greater air flow, but they don't give the lowest possible temperatures.

The high cold fraction combination of airflow and cold temperature **produces the maximum refrigeration capacity, or greatest BTU/H (Kcal/H).**

A low cold fraction (below 50%) means a smaller volume of air coming out that's **very cold** (down to -40°F/-40°C). In short, the less air you release, the colder the air.

Just remember, your maximum BTU/H (Kcal/H) capacity (also called maximum cooling or refrigeration) occurs with a high cold fraction tube.

The chart to the left shows you the temperature drop (pink bar) and rise (grey bar) you can get at various inlet pressures and cold fraction settings.

Air Conditioning Power

The cooling and heating power in BTU/H can be found by using these formulas.

For Cooling: BTU/H = 1.0746 (cfm c) (Ti-Tc)
For Heating: BTU/H = 1.0746 (cfm h) (Th-Ti)

Where: CF = Cold Fraction
cfm t = Total Air Flow
cfm c = Cold Air Flow = cfm t (CF)
cfm h = Hot Air Flow = cfm t (100 - CF)
Ti = Inlet Temperature
Tc = Cold Oir Outlet Temperature
Th = Hot Air Outlet Temperature

Heat Balance Formula

Cold fraction can be computed from the temperature readings from the inlet temperature (Ti), the cold air outlet temperature (Tc), and the hot air temperature (Th), so that;

$$\text{COLD FRACTION \% (CF)} = \frac{\text{Th-Ti +4}}{\text{Th-Tc}} \times 100$$

Two Sizes Available in Stainless Steel

▲ **Model 20015 Stainless Steel**

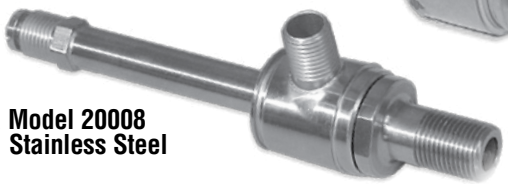

▲ **Model 20008 Stainless Steel**

▲ **The Model 25015 Aluminum**

▲ **The Model 20400 Application Development Kit**
includes all 8 generators, 12" Snap-Flex Hose, 5 micron filter, cold end muffler, and Stainless Steel AiRTX Vortex Tube.

Vortex Tube Capacities

Model SS / AL	Inlet Pressure* (psi)	(BAR)	Air Consumption (cfm)	(lpm)	Capacity (BTU/H)	(Kcal/H)
20008 SS	100	7	8	220	600	100
20010/25010	100	7	10	280	600	150
20015/25015	100	7	15	420	1100	230
20025/25025	100	7	25	700	1800	380
20035/25035	100	7	35	990	2800	630

*Inlet temperature 70°F/21.1°C

Reliable, Predictable, Easy to Control Without Tools

A Vortex Tube turns factory compressed air into two airstreams, one very cold and one hot, using no moving parts. Simple and low-cost, a Vortex Tube can produce:

- temperatures from -40°F (-40°C) to +230°F (+110°C) from 70°F compressed air
- up to 2800 BTU/H (630 Kcal/H) refrigeration
- air flow rates up to 35 cfm (990 lpm)

You just set the cold temperature output with the handy control knob and your thermometer. **No tools are required.**

Assuming your compressed air input pressure and temperature remain constant, a Vortex Tube will hold output temperatures ±1°F (±0.6°C).

Our unique temperature control knob lets you adjust the cold air discharge without tools.

A simple, interchangeable part — the Vortex Generator — allows our Vortex Tube to deliver five different air flows:
8, 10, 15, 25, 35 cfm (220, 280, 420, 700, 990 lpm) — each with two ranges of cooling performance (high or low).

The User-Friendly Vortex Tube from AiRTX —

Starting with corrosion-resistant, food-grade Stainless Steel as the principal material of construction, AiRTX designers have optimized every aspect of Vortex Tube design for convenience, dependable performance, and long-lasting service.

AiRTX Vortex Tube now available in Aluminum for light duty applications.

The AiRTX Vortex Tube is as good-looking as it is functional. It's precision machined, assembled and tested.

Manufactured to exacting tolerances, AiRTX Vortex Tubes are produced under strict quality control to ensure years of reliable, maintenance-free operation.

Putting Vortex Tubes to Work: Packaged Systems, "Tube Only," or an Application Development Kit

AiRTX offers Vortex Tubes in several ready-to-use packaged systems for common industrial applications. Packaged systems include the **Model 60040 Air Gun** and the **Cabinet Cooler** — all described on subsequent pages.

We also offer an **Application Development Kit** for the system designer who needs a Vortex Tube for studies and design verification. By switching one interchangeable part supplied with the kit, you can produce the full range of air flows and cold fractions the tube is capable of producing. The **Application Development Kit** includes instructions, 5-micron filter, cold end muffler, 8 generators and flex line.

Lastly, you can purchase the Vortex Tube alone, or with other components to meet system requirements.

Three Tubes, Ten Levels of Performance

AiRTX's modular design Vortex Tube gives you ten ranges of performance from a single tube, simply by changing the one-piece Vortex Generator. Both high and low cold fraction generators are available for 8, 10, 15, 25 and 35 cfm (220, 280, 420, 700, 990 lpm) input flows. You can purchase Vortex Generators individually or in a kit that includes all sizes.

Capacities of Aluminum Vortex Tube same as Stainless Steel Tube!

AiRTX Stainless Steel Vortex Tubes

Instant Cold Air — to -40° F — for Industrial Spot Cooling, or Hot Air — to 230° F — for Heating, from Ordinary Compressed Air! Also available in Aluminum for light duty applications

Stainless Steel AiRTX Vortex Tubes - Two sizes Available

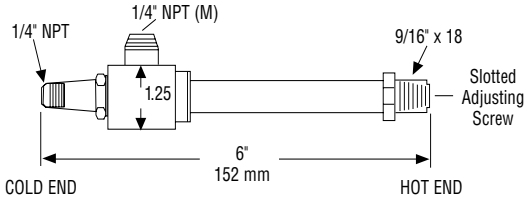

▲ **Vortex Tube Model 20008 SS**

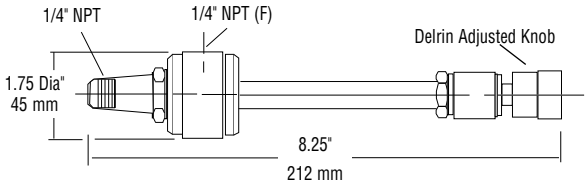

▲ **Vortex Tubes Models 20010-20035 SS**
*Available with 1/4" BSP

Aluminum AiRTX Vortex Tubes - One Size Available

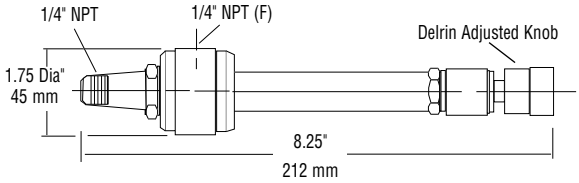

▲ **Vortex Tubes Models 25010-25035 Aluminum**
*Available with 1/4" BSP

Parts Numbering System Stainless Steel Vortex Tube

- Stainless Steel AiRTX Tube series number 20000.
- 2nd digit 0 — Maximum cooling
  1 — Maximum cold temperature
- The last 2 digits of the part number indicate cfm usage at 100 psi.

Model	Description	CFM	LPM
20008	Maximum cooling Stainless Steel Vortex Tube	8	226
20010	Maximum cooling Stainless Steel Vortex Tube	10	283
21010	Maximum cold temperature Stainless Steel Vortex Tube	10	283
20015	Maximum cooling Stainless Steel Vortex Tube	15	425
21015	Maximum cold temperature Stainless Steel Vortex Tube	15	425
20025	Maximum cooling Stainless Steel Vortex Tube	25	708
21025	Maximum cold temperature Stainless Steel Vortex Tube	25	708
20035	Maximum cooling Stainless Steel Vortex Tube	35	991
21035	Maximum cold temperature Vortex Tube	35	991
20400	Application Development Kit containing: Vortex Tube 10/15/25/35 cfm H and L generators, cold muffler, filter, Snap-Flex Hose		

Adavantages of the Airtx Vortex Tube

- No moving parts, portable, lightweight and low cost.
- No spark hazard, RF/EMI interference.
- Uses no electricity, freon or chemicals; just filtered, factory compressed air.
- Instant on/off, easy to control, cools without waste.
- No residue to clean up, no parts washing needed.
- Reliable, maintenance-free, durable Stainless Steel construction.
- Input air flows of 8, 10, 15, 25, and 35 cfm (220, 280, 420, 700, 990 lpm); up to 2800 BTU/H (630 Kcal/H) cooling capacity.
- Generate hot air to +230°F (+110°C), without a spark or explosion hazard to soften plastic, melt glues and seal packaging.
- Cool workers wearing protective gear.
- "Temperature cycle" electronic components, instruments, switches and thermostats
- Two sizes available in Stainless Steel.
  One size available in Aluminum

...see some application ideas on page 7.

Use Them For:

- Air condition electronic control enclosures: CNC cabinets, industrial PCs, PLCs and motor controls.
- Cool manufacturing processes: machining plastics or metals, wood working, soldering, adhesive application, heat sealing, sewing needles, mold tooling and many others.
- In the laboratory: cool and dehumidify gas samples, cool environmental chambers.

Parts Numbering System Aluminum Vortex Tube

- Aluminum AiRTX Vortex Tube series number 25000.
- 2nd digit 5 — Maximum cooling
- The last 2 digits of the part number indicate cfm usage at 100 psi.

Model	Description	CFM	LPM
25010	Maximum cooling Stainless Steel Vortex Tube	10	283
25015	Maximum cooling Stainless Steel Vortex Tube	15	425
25025	Maximum cooling Stainless Steel Vortex Tube	25	708
25035	Maximum cooling Stainless Steel Vortex Tube	35	991

Conversion Formulas

°F =	9/5 °C + 32°
°C =	5/9 (F - 32°)
BAR =	psi ÷ 14.5
Kcal =	BTU x .2520
LPM =	cfm x 28.3
oz =	g x .035
BTU =	WATTS x 3.41

BTU conversion — HP to BTU/Hour

1 Hp =	42.44 BTU/min.
1 Hp =	2546 BTU/hr.
1 Hp =	746 WATTS
1 KWH =	3414 BTU/hr.

Vortex Tubes at Work

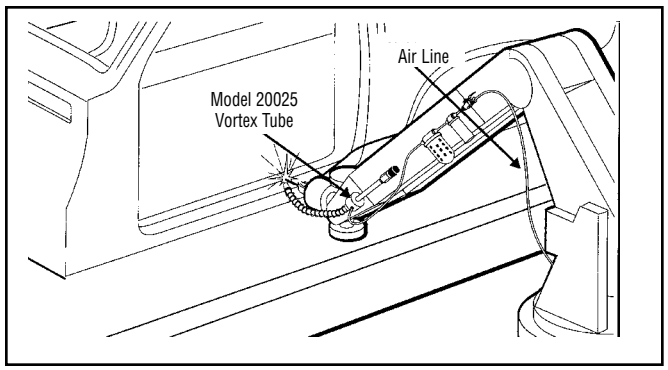

Transportation — Spot Welding

Cooling this spot welding operation with a Vortex Tube virtually eliminates secondary smoothing operations and greatly improves the appearance of the product.

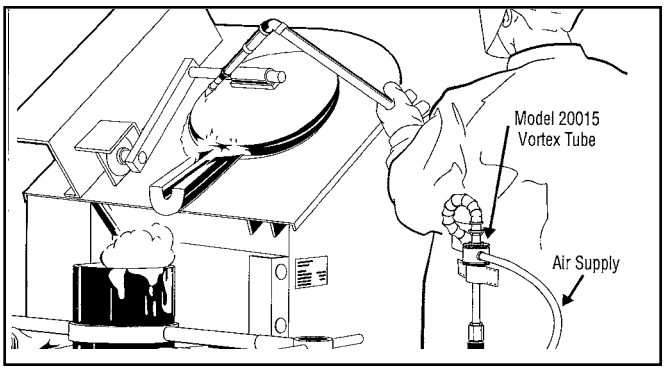

Foundry Operations

Cold air from a Vortex Tube is piped into a foundry worker's protective suit. The Vortex Tube has a large control knob, allowing the cold air to be adjusted while wearing gloves.

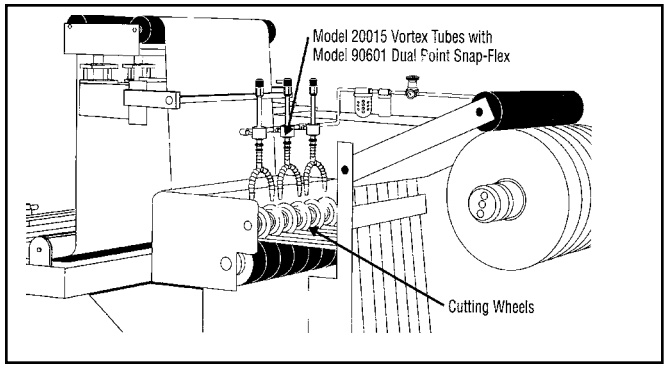

Plastics — Slitting

Cutting wheels on this slitter can work at top speed — and stay sharper longer — when cold air from Vortex Tubes eliminates the frictional heat buildup. The trim edge is also cleaner.

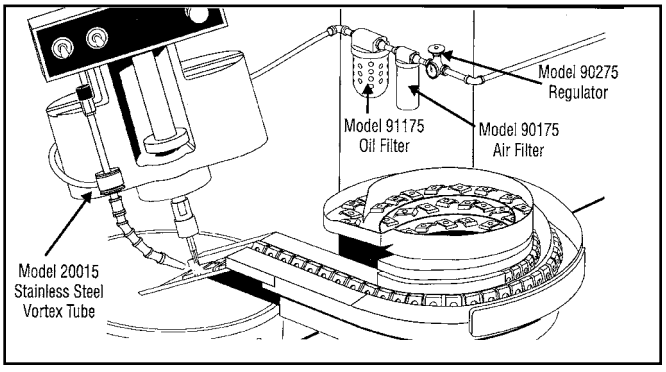

Metal Fabricating — Tapping

Tapping brass clips is completed without messy liquid coolants using 0°F (-18°C) air from a Vortex Tube to cool the tap. The brass does not have a chance to gum up, the cut is cleaner, and secondary cleaning operations are eliminated.

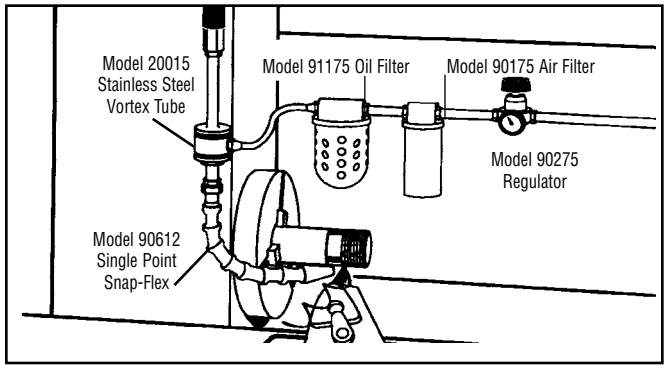

Metal-Working — Single-Point Threading

Heat buildup in this single-point threading operation can shorten tool life and produce a rough thread. Clean, dry, sub-zero air cooling allows increased speed, while eliminating tool microcracking and premature failure.

Call the AiRTX Air Line for Free Technical Support
1-800-307-7475
E-mail Us at
sales@airtx.com
Visit Our Website at
airtx.com

AiRTX Stainless Steel Air Guns

Sub-Freezing Air for Dry Machining and Spot Cooling Industrial Processes — Reliable, Non-Toxic, Non-Polluting, No Residue, Low Cost

Adjustable Models Now Available

Model 60015
Most Popular

Model 60051
Adjustable

Model 60061
DualPoint Adjustable

Model 60071
Aluminum

▲ **The Air Gun** *produces temperatures approximately 75°F (41°C) below your compressed air temperature, providing residue-free, subfreezing air for dry machining or spot cooling industrial processes, tests, etc.*
Several models to fit any job requirement

A Ready-to-Use, Portable Cold-Air Source

The Air Gun is your portable cold-air source for improving dry machining operations or spot-cooling a wide range of industrial processes.

Using only compressed air, the Air Gun produces a stream of cold air 75°F (41°C) below your compressed air temperature @ 80 psi.

It's clean, convenient — put the gun where you need it, using the magnetic base — aim the cold air stream onto your work with the flexible hose — go to work!

The Air Guns are heavy-duty, built for the rigors of factory-floor service. Made of heavy-gauge Stainless Steel, they are precision-machined, assembled and tested under strict quality control. They will never pit or rust when subjected to coolants, water, or other corrosive materials.

Advantages of the Airtx Portable Air Gun

- No liquids, ozone-depleting chemicals or residue
- Increase feeds, speeds and quality
- Eliminates liquid coolant cost, contamination, skin irritation, mess on walls/floors/machines
- Finishes the job with a clean, dry part
- Improves tool life, production rates, finish and tolerances
- Eliminates microcracking and burning
- Reduces wheel loading and dressing

Ready-to-Use System

- Just plug in air line, aim it, go to work
- Instant on/off
- Muffled for quiet, efficient operation around workers
- Maintenance-free, no moving parts
- Lightweight, low-cost
- Uses standard factory air, with variable flow rates of 10, 15, 25, and 35 cfm up to 2800 BTU/H cooling capacity

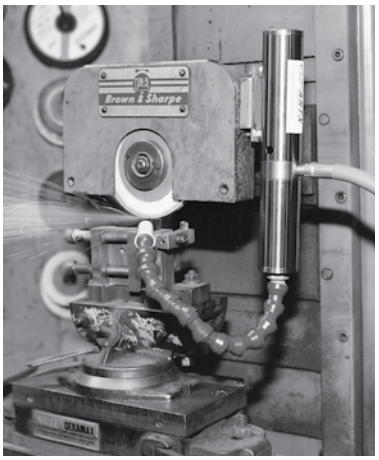

▲ **Model 60015** *at work*

Use Them For:

- Ideal for tool-room cutter grinders or production milling/drilling/grinding/tapping
- Perfect for tapping operations
- Air-cooled dry machining for metals, composites, plastic, rubber, wood
- Cool solders, hot melts, adhesives
- Thermo-test electronic components, circuit boards and thermostats
- Shrink-fit parts
- Cool mold tooling, ultrasonic devices
- Cool needles to prevent thread breakage and heat cracking on synthetic threads

The Stainless Steel Air Gun — Cooling and Heating

The Stainless Steel Air Gun is an applied Vortex Tube to accommodate factory compressed air supplies. The range of temperature from the Stainless Steel Cold Gun is a 75°F (41°C) @80 psi drop from the incoming ambient air supply to a 140°F (77°C) increase of the compressed air supply. Since compressed air supply temperature is very close to the ambient, a 75°F day would yield a cold stream of air from the AiRTX Air Gun of 0°F (-18°C).

Call the AiRTX Air Line for Free Technical Support
1-800-307-7475
E-mail Us at
sales@airtx.com
Visit Our Website at
airtx.com

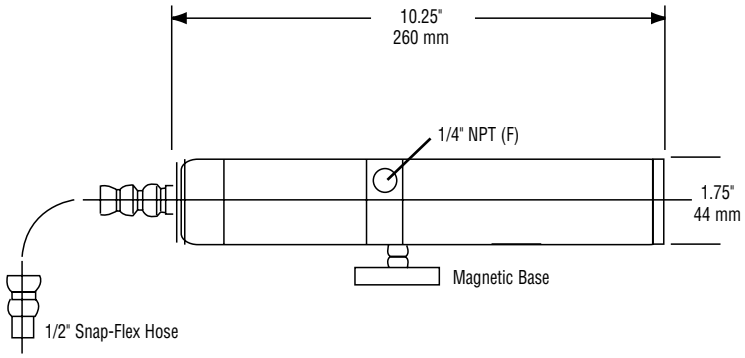

▲ **Model 60015**

Stainless Steel Air Gun

Model	Description
60015	Stainless Air Gun with magnetic base, Snap-Flex Hose and generators (4)
60040	Stainless Air Gun with magnetic base, Snap-Flex Hose and generators (4) and 5 micron filter
90601	Y dual point application hose

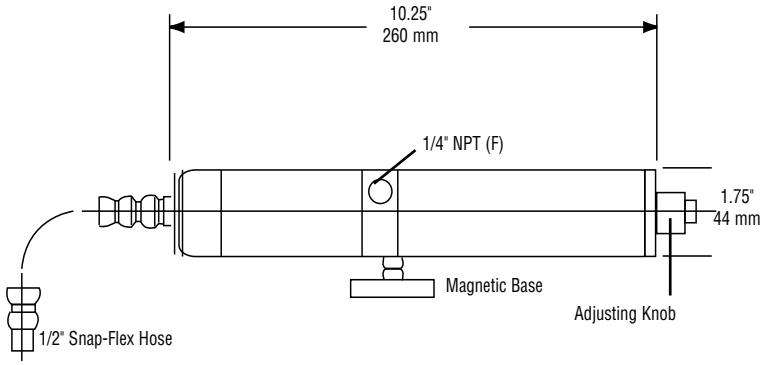

▲ **Model 60051**

Adjustable Stainless Steel Air Gun

- Same wide range of temperatures and flow as the 60015 but with adjustable cold air flow and temperature range with each generator

Model	Description
60050	Adjustable Stainless Steel Air Gun Kit with magnetic base, 12" Snap-Flex Hose, generators (4), 5 micron air line filter
60051	Adjustable Stainless Steel Air Gun with magnetic base, 12" Snap-Flex Hose, generators (4)

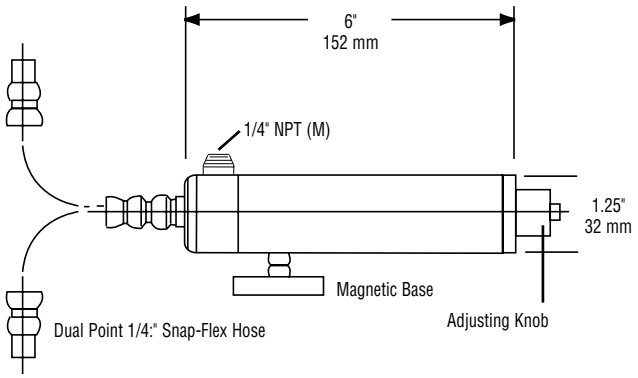

▲ **Model 60061**

Adjustable Stainless Low Flow Air Gun

- Smaller size with adjustable flows and temperature range of the 10 and 15 cfm generator

Model	Description
60060	Adjustable Air Gun with magnetic base, 5 micron air filter, dual point hose, 10 and 15 cfm generators
60061	Stainless Steel adjustable Air Gun with magnetic base, dual point hose, 10 and 15 cfm generators

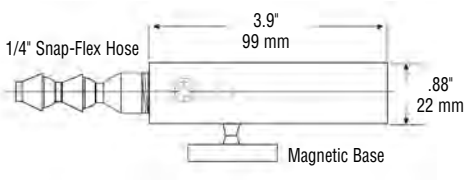

▲ **Model 60071**

Compact Cold Air Gun

- Small size and a miser on compressed air, 75°F drop in compressed air temperature

Model	Description
60070	Kit includes: 8 cfm compact cold air gun, Snap-Flex Hose, filter regulator with gauge, magnetic base
60071	8 cfm compact cold air gun, Snap-Flex Hose, magnetic base

AiRTX Stainless Steel Air Guns

CASE STUDY

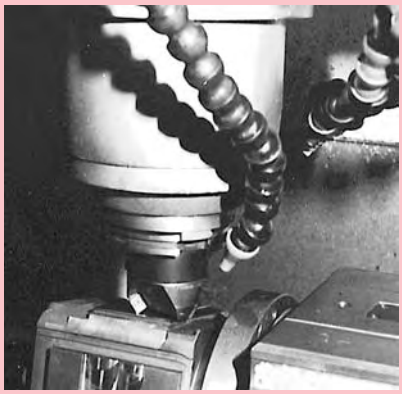

▲ Stainless Steel Air Gun Model 60400

An Alternative to Dry Machining

Occasionally a milling operation comes along that cannot be done using coolants to dissipate the heat. Such is an operation at a machine shop in New Miami, Ohio. They have a job using 4140 steel with a 35 Rc rating. The inserts are so hard that coolants are not recommended because they can cause cracking. The operation is set up at a speed of 1350 RPM with a 5 inch per minute feed rate. The 2 inch cutter has three inserts.

The customer requires the end product to be mirror finished. Any discoloration from the heat results in a scrap product. For this reason, the inserts must be replaced after every eight pieces. At $8.00 per insert plus the operators' time to replace the spent units, another method of machining had to be found.

Qualiturn contacted AiRTX International, The Air Research Technology Company. They recommended the Stainless Steel Model 60040 that converts normal shop air into a sub-zero air stream and provides instant spot cooling. AiRTX manufactures the only Stainless Steel cooler on the market which is very practical over aluminum units in hot areas with high speed chips involved.

Using the Model 60040, Qualiturn was able to increase production by 400% before changing the insertsAccording to Mike Barber, owner of Qualiturn Machining Center, "the AiRTX Model 60040 at $275.00 was paid for during the first hour's run of products".

Compact, reliable, and maintenance free, the Stainless Steel Model 60040 provides a simple, clean, and coolant free solution to many machining operations. Just plug into a standard compressed air line (80-90 psi), aim the flexible 12" nozzle, and let it go to work. The magnetic base holds the Model 60040 in place on the machine.
The same sub-zero air is available regardless of the position of the Model 60040.

In addition to dry machining, the Stainless Steel Model 60040 can improve drilling, grinding, or tapping operations. Also cooling motors, parts, processors, and molds are easily achieved to increase production. You can even use the cold air to shrink shafts and the hot air for expanding a bearing's trace for easy fits in pressing bearings onto shafts..

▲ Stainless Steel Air Gun Model 60015

A specialty furniture design company, 1st in Design, has found a way to speed operations by removing wood burning discolorations before they occur. Using the Gold Air Gun model 60015, normal shop compresed air is cooled to -15 degrees F to cool the saw blades and router used in manufacturing wood furniture.

Burt Aarsen, owner of 1st in Design, says, " the Cold Air Gun is such a simple, clean, way to eliminate a time consuming step in making furniture. I use it in almost every drilling, sawing or router operation.

The Cold Air Gun also increases tool life by lessening the small heat cracks in the sharp edges of the tools and that means a sharper edge for a larger period of time".

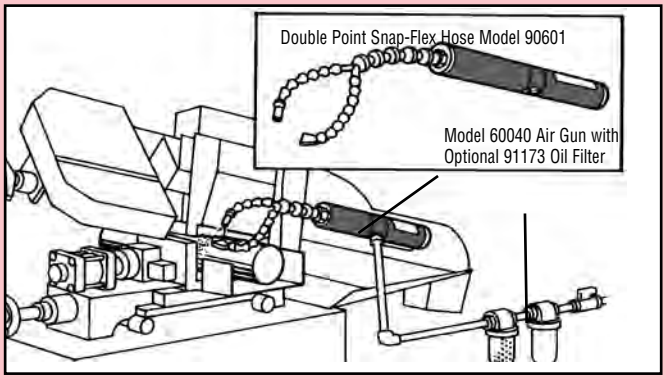

Wood Working — Band Sawing

The Model 60040 Air Gun eliminates liquid coolant in cutting of bar stock. Cold air prolongs blade life and stops premature dulling.

AiRTX Stainless Steel Air Guns at Work

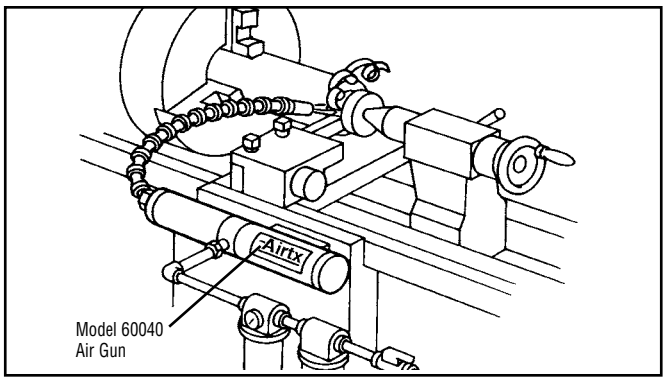

Plastics — Machining

Model 60040 Air Gun speeds production on this plastics machining operation and improves finish by cooling cutting tool with 10°F (-12°C) air.

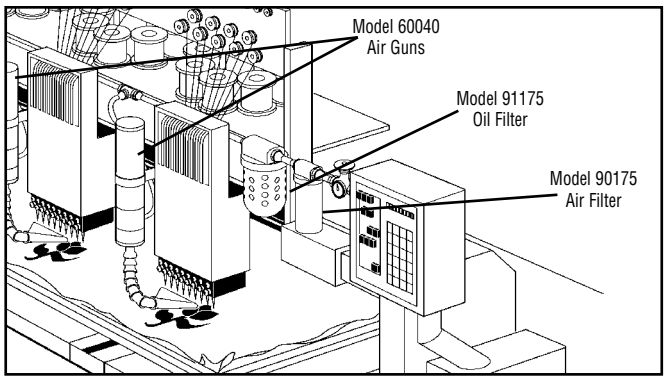

Textiles — Sewing/Embroidering

In production sewing or embroidering, the Model 60040 Air Gun eliminates needle heat build-up, which can cause thread burn-through and stoppages.

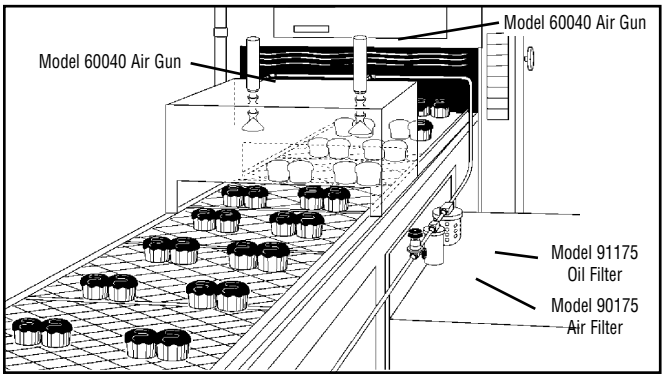

Food Processing — Product Cooling

Two Stainless Steel Model 60040 Air Guns in a plastic enclosure provide clean, dry, cold air to cool baked goods — for a tiny fraction of the cost of a long cooling conveyor. Conveyor distance was cut from 22 feet to 8 feet.

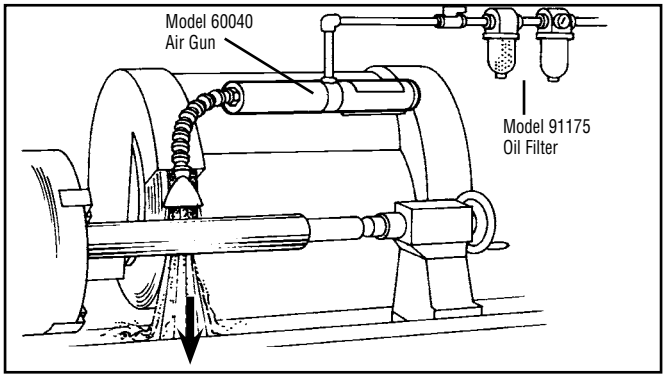

Metalworking — Grinding

Grinding speed can be increased, while still holding tolerances, by using the Model 60040 Air Gun to cool the wheel and material.

Metalworking — End Mill

CASE STUDY

We recently purchased the AiRTX Stainless Steel Air Gun model #60051 and have found it to be a great product. We tested this product on one of our lathes as well as our horizontal end mill with double angle cutters. With this product we increased tool life on the lathe by 300% (mild steel). Tool life on the end mill was increased by 250% (stainless steel) and 350% (mild steel). "**I figure that this product paid for itself within 3 weeks of purchase. I highly recommend this product".**

Courtesy of AGS Group, Inc.

Woodworking — Router Bits

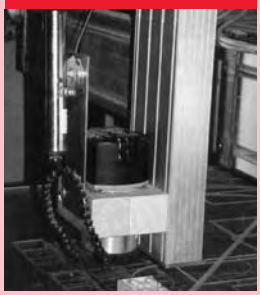

A Techno-Isel Series III CNC router cuts knife templates from a strip of plastic. Unique also uses the router to manufacture carved mouldings and baseboards. The router is mounted with an AiRTX Model 60040 Air Gun for spot cooling, making the plastic easier to work with and prolonging the life of the router bits.

Courtesy of Custom Woodworking Business Magazine.

CASE STUDY

Unique Woodworking Carving uses a Techno-Isel Series III PC-driven CNC router to cut the knife template into a strip of plastic. Owner Jay Bouxsein says that initially, working with the plastic was difficult because it melted — chips that were cut off would re-adhere to the piece, so the template would require significant cleaning before it could be used.

Bouxsein found a solution by mounting an AiRTX Model 60040 Air Gun to the router. The gun is a Stainless Steel Vortex Tube. When compressed air is spun in the tube, the air on one side cools while the other side heats up. "I thought, 'It's heat we're trying to avoid. I'll just get one of these tubes and blow cold air on the thing,'" he says. "It works like a champ. It cools [the plastic] just enough so that I don't get the meltback."

The cool air also helps protect the carbide router bits, which can soften under heat and wear out more quickly, he adds.

AiRTX POLAR Stainless Steel Cabinet Coolers

Freon Free - Low-Cost Cooling for Controls in Hot, Hazardous, Corrosive or Washdown Environments —

COOLING UP TO 5600 BTUH

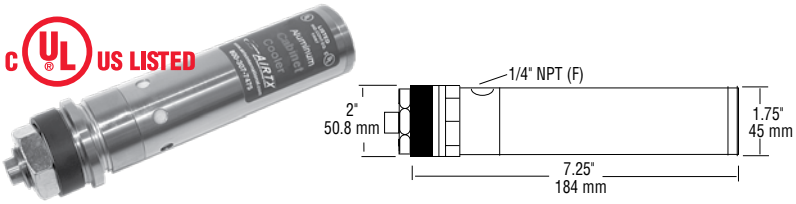

▲ **Models 75008, 75015, 75025, 75035 Aluminum Cabinet Cooler**

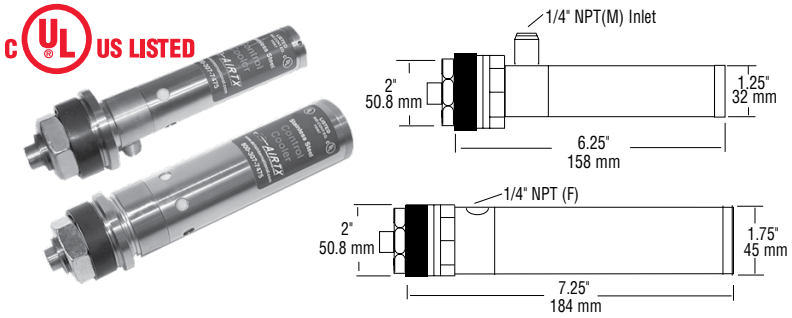

▲ **Model 70008 Stainless Steel for NEMA 4/12 Cabinets and Models 70015, 70025, 70035 Stainless Steel**

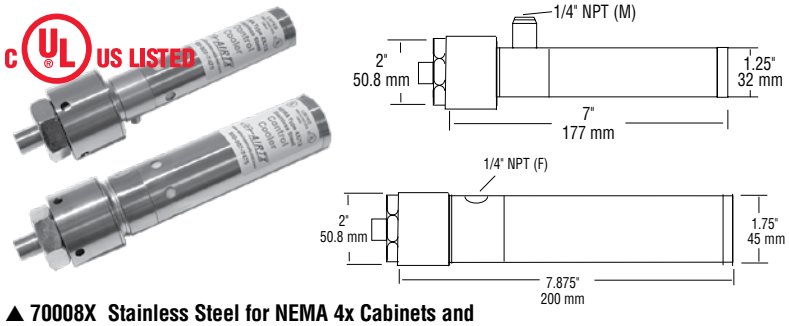

▲ **70008X Stainless Steel for NEMA 4x Cabinets and Models 70015x, 70025x, 70035x Stainless Steel**

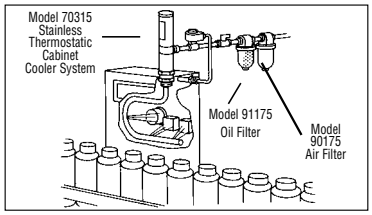

Bottling Plant

AiRTX Cabinet Cooling Systems are Stainless Steel, so washdown of these leak testing and production controls in a bottling operation is easy. NEMA cabinets can be secured without concern for heat build-up.

Thermostatic System Model 70335

1 of Model	70035	Stainless Steel Cooler
1 of Model	90301	Solenoid Valve
1 of Model	90300	Thermostat
1 of Model	90175	5 micron Auto Drain Filter
1 of Model	70000-14	8 ft Ducting Kit

Keep Factory-Floor Controls On-line in the worst possible conditions with up to 5600 BTU/H of Cooling

Dirt, moisture, hazardous or corrosive materials — a bad environment is the Achilles' heel of industrial electronic systems. And it's a real hazard when you have to open the cabinet door to prevent heat build-up.

Compressed-Air-Operated Stainless Cabinet Coolers for Hazardous Environments

Using a low-cost, reliable Vortex Tube, compressed-air-operated AiRTX Cabinet Coolers purge and cool electrical/electronic enclosures with filtered air that's 50°F / 27°C colder than your compressed air supply. A built-in relief valve lets hot air escape from the control enclosure, while the cooler supplies clean, cold air.

They mount — in minutes — in a standard electrical knock-out to maintain your NEMA 4, 4X, or 12 rating. A built-in, heavy-duty muffler makes the Cabinet Cooler extremely quiet for use in production areas.

Use Them Anywhere!

If you're an OEM, you'll find the fit and finish of our Cabinet Coolers a complement to your own equipment.

Thermostatic systems are highly recommended as they produce a truly **maintenance free** cooling system. No forgetting to turn it on or off, increasing or decreasing air supply on hot days, consuming compressed air when cooling is not necessary, and no thermal hot and cold changes. A constant 90°F (32°C) to provide the electronics with a long life.

For double wide cabinets up to 10'W x 6'H x 2'D or cabinets in extreme hot conditions above 150°F, order Model 70370 for 5600 BTU/H of Cooling.

AiRTX Polar Cabinet Cooler Advantages

- Higher BTU per CFM
- Greater cooling with the same air usage
- Available in Stainless Steel and Aluminum
- Wide range of Cooling (600-5600 BTUH)
- No vibration to affect CCTV cameras
- Thermostatically controlled units available
- Compact for cramped factory areas
- No maintenance, no moving parts
- Requires no electricity • No RF/EMI interference
- No fans or filters • Muffled for quiet operation
- Maintain **NEMA 4, NEMA 4x,** and **NEMA12** integrity

Use Them For

- NC/CNC cabinets
- Industrial PCs
- PLCs
- Measuring instruments and recording devices
- Closed-circuit TV cameras
- Motor controls and relays

AiRTX Easy Mount Turnkey Cabinet Cooling Enclosure

Easy installation:

1. Attach power supply to inside panel for solenoid and thermostat operations.
2. Attach compressed air supply line for automatic drain air filter.
3. Drill 11/16" hole in cabinet for thermostat and 1" hole in cabinet for Control Cooler. Secure with thread nuts inside the cabinet.
4. Attach the dwelling kit to distribute the cold air throughout the cabinet

Cabinet Cooling Turnkey Enclosure

Model	Description
70308CC	600 BTU/H Thermostatic System
70315CC	1100 BTU/H Thermostatic System
70325CC	1800 BTU/H Thermostatic System
70335CC	2800 BTU/H Thermostatic System

AiRTX Easy Mount Turnkey Cabinet Cooling Enclosure Advantages

- Everything you need in One Package
- Easy to install
- Complete System for 600 to 2800BTU/Hs
- Great in dusty and wet environments

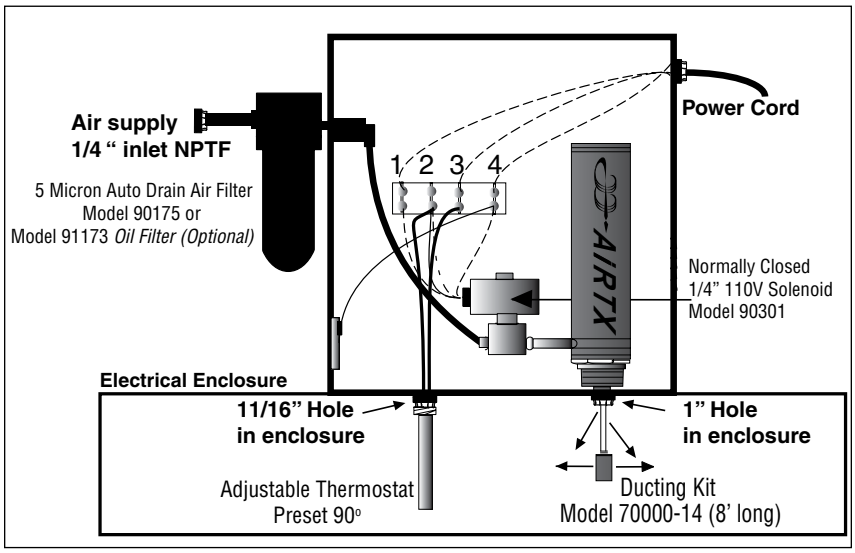

Thermostatic System includes: Cabinet Enclosure System, 5 micron Auto Drain, Filter #90175, Ducting Kit, Thermostat and 110V Solenoid Valve

AiRTX Mounting Elbow Model 70000-11

The Airtx Cabinet Cooler can be mounted in any place and work just as efficiently. The mounting Elbow is available for tight spaces and upright positioning. The Model 70000-11 is attached to the Cabinet wall through a 1" hole. O rings seal the mounting Elbow maintaining the integrity of a NEMA 4 or 12 Cabinet.

▲ Mounting Elbow
Model 70000-11

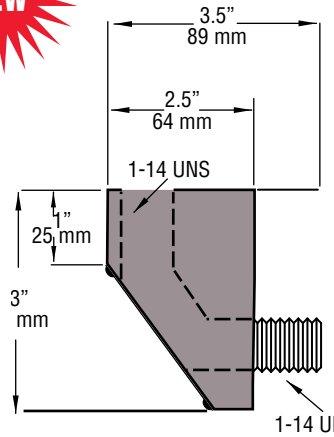

UNS= Unified National Standard

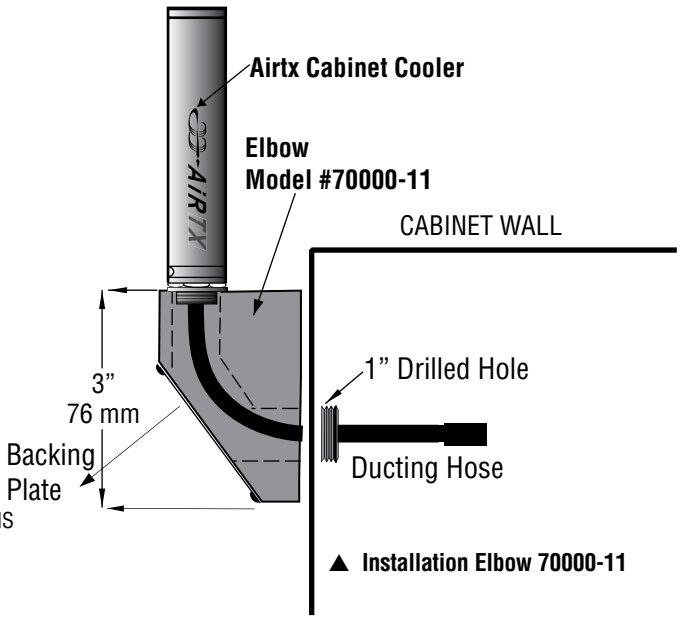

▲ Installation Elbow 70000-11

Call the AiRTX Air Line
for Free Technical Support
1-800-307-7475
E-mail Us at
sales@airtx.com
Visit Our Website at
airtx.com

Cabinet Coolers — Cost Comparisons

POLAR COOLERS COST LESS THAN FREON AIR CONDITIONERS

	AiRTX Stainless Steel BTU Model 70325	Freon Air Conditioner 1800 BTU
Initial Unit Cost	$602.00 (20 year life) $30.00/year	$2000.00 (5 year life) $400.00/year
Installation (one time cost)	$50.00/hour $2.50/year/20 years	$50.00/hour $10.00/year
Maintenance	No Maintenance	Maintenance 4 hours/year for charging freon, cleaning and replacing filters, leak checks $200 per year
Operation	5 hours/day, 9 months/year Based on $0.25/1000 cu. ft. of air $288.00/year	7 hours/day, 9 months/year $250.00/year
Total Operation Cost	$320.50/year	$850.00/year (Not including downtime for repairs)

**Freon air conditioners must be deregulated by 65% at 90°F and 95% at 115°F. Therefore, the freon air conditioners must operate longer than the Cabinet Cooler or be oversized to provide the same amount of cooling during warmer weather when the ambient temperature is higher.*

The recommended thermostat setting is 90°F (32°C). This setting is within the safe operating limits of most components and reduces condensation on the outside of the cabinet during hot humid weather.

Temperature swings create connector stress, while excess heat dries circuit boards and result in life spans of the controls being cut in half for every 20°F (10°C) over normal operating temperatures of 100°F (38°C).

The Cabinet Coolers are very inexpensive insurance against premature replacement of a $2,000 to $3,000 electronic circuit board.

Installation of Thermostatic Cabinet Cooler System

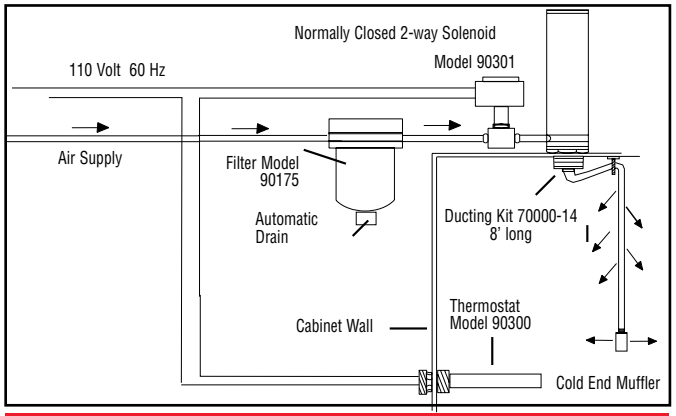

Installation of Double Wide Thermostatic Cabinet Cooler System

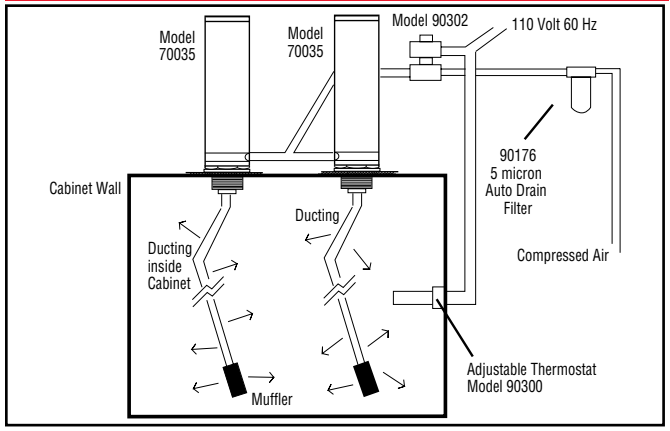

STANDARD NEMA ENCLOSURE RATING

National Electrical Manufacturers Association (NEMA Standard 250) Electrical and Electronic Manufacturers Association of Canada (EEMAC)

NEMA Type 4 - Enclosures are intended for indoor or outdoor use primarily to provide adegree of protection against windblown dust and rain, splashing water, and hose directed water, undamaged by the formation of ice on the enclosure.

NEMA Type 4x - Enclosures are intended for indoor or outdoor use primarily to provide a degree of protection against corrosion, windblown dust and rain, splashing water, and hose-directed water; undamaged by the formation of ice on the enclosure.

NEMA Type 12 - Enclosures are intended for indoor use primarily to provide a degree of protection against dust, falling dirt, and dripping noncorrosive liquids.

Double Wide System Components Model 70370 - 5600 BTU/H

2 of Model	70035	Cooler with Ducting Kit
1 of Model	90302	Solenoid
1 of Model	90300	Thermostat
1 of Model	90176	Auto Drain Filter

For double wide cabinets up to 10'W x 6'H x 2'D or cabinets in extreme hot conditions above 150°F, order Model 70370 for 5600 BTU/H of Cooling.

AiRTX POLAR Stainless Steel Cabinet Coolers

c UL US LISTED *Cooling — Stainless Steel POLAR Cabinet Coolers Maintain NEMA 4, 4X and NEMA12 Integrity and are UL Listed*

Determining Requirements for Sizing Correct Cabinet Cooler

1. Size the heat load area of the cabinet using the following formula:

(2 x W + 2 x D) Height = square feet of cabinet

Example: 3' wide, 1' deep, 4' high = 32 square feet

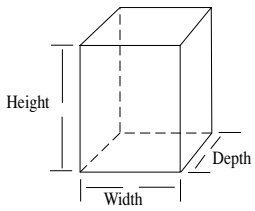

2. Determine inside temperature reading for maximum hotter outside temperatures.

Example: If reading is taken on a 70°F day and the temperature reads 110°F, add 25°F if the electronics will be operating during a summer day temperature of 95°F or add more if it will get hotter.

3. 90°F (32°C) is a safe operating temperature for most electronics to reduce heat stress on the controls and drying of the wafer boards.

4. Subtract the temperature of 90°F as the desired temperature inside the operating cabinet from the temperature reading in step 2 to determine the temperature difference or Delta T.

5. Use the square area of your cabinet readings on the left side of the scale and match it with the temperature difference from step 4 on the top of the sizing chart.

6. The intersection of these two numbers give you the BTUs required to maintain the desired 90°F inside temperature.

7. Match the BTU reading with the proper AiRTX Cooler.

Kcal = BTU x .2520
°F = 9/5 (°C + 32)
°C = 5/9 (°F - 32)
BTU = Watts x 3.41

POLAR CABINET COOLER MODELS

NEMA TYPE 4, 12 Aluminum	NEMA TYPE 4, 4X SS	NEMA TYPE 4, 12 SS	Description
75008	70008X	70008	600 BTU/H Cooler and ducting kit, muffler
75108	70108X	70108	600 BTU/H Cooler with ducting kit, muffler and 5 micron auto drain filter
75308	70308X	70308	600 BTU/H thermostatic system includes: Cooler auto drain filter, ducting kit, muffler thermostat, solenoid valve
75105	70015X	70015	1100 BTU/H Cooler and ducting kit, muffler
75115	70115X	70115	1100 BTU/H Cooler with ducting kit, muffler and 5 micron auto drain filter
75315	70315X	70315	1100 BTU/H thermostatic system includes: Cooler, auto drain filter, ducting kit, muffler, thermostat, solenoid valve
75025	70025X	70025	1800 BTU/H Cooler and ducting kit, muffler
75125	70125X	70125	1800 BTU/H Cooler with ducting kit, muffler, and 5 micron autodrainfilter
75325	70325X	70325	1800 BTU/H thermostatic system includes Cooler, auto drain filter, ducting kit, muffler, thermostat, solenoid valve
75035	70035X	70035	2800 BTU/H Cooler and ducting kit, muffler
75135	70135X	70135	2800 BTU/H Cooler with ducting kit, muffler, and 5 micron auto drain filter
75335	70335X	70335	2800 BTU/H thermostatic system includes Cooler, auto drain filter, ducting kit, muffler, thermostat, solenoid valve
75370	70370X	70370	5600 BTU/H thermostatic system includes: 2 Coolers (Model 70035) auto drain filter, ducting kit, muffler, thermostat, solenoid valve

Sizing Chart		BTU Requirements for Cooling *Inside temperature drop needed to maintain a 90°F (32°C) Thermostat setting*				
Cabinet Size	**Square Feet**	**90°F**	**70°F**	**50°F**	**30°F**	**10°F**
2'H x 2'W x 2'D	16	500	350	150	50	50
3'H x 3'W x 2'D	30	1100	800	450	150	100
4'H x 3'W x 1'D	32	1300	900	550	150	100
5'H x 3'W x 1'D	40	1600	1100	700	150	100
5'H x 4'W x 1'D	50	2200	1400	900	300	150
5'H x 4'W x 2'D	60	2600	1800	1100	500	200
5'H x 5'W x 2'D	70	3000	2100	1300	600	200
6'H x 4'W x 2'D	72	3100	2200	1400	700	200
6'H x 5'W x 2'D	84	3600	2600	1600	750	200
6'H x 6'W x 2'D	96	4200	3000	1900	900	200
7'H x 6'W x 2'D	112	4800	3500	2200	1000	200
7'H x 7'W x 2'D	126	5800	4100	2600	1300	250
8'H x 7'W x 2'D	144	6500	4600	2900	1450	300
8'H x 8'W x 2'D	160	7000	5200	3300	1650	350
8'H x 10'W x 2'D	192	8800	6400	5200	2100	450

Square Meters	50°C	39°C	28°C	17°C	6°C
1.49	126	88	38	13	13
2.79	280	202	113	38	25
2.97	330	227	139	38	25
3.72	405	280	176	38	25
4.65	555	353	227	75	38
5.60	655	454	280	126	50
6.50	756	530	328	151	50
6.69	781	555	353	176	50
7.80	907	655	403	189	50
8.92	1058	756	480	227	50
10.40	1210	882	554	252	50
11.71	1462	1033	655	328	63
13.38	1638	1159	730	365	76
14.86	1764	1310	832	416	88
17.84	2218	1612	1310	530	113

AiRTX Air Amplification

Air Knives, Air Amplifiers, Nozzles, Blow Guns, Manifolds — For All Your Blow Off Needs

Designed Technology of AiRTX Products to use surrounding FREE air to increase the volume of compressed Air!

▲ Air Amplification Products

Call us 1-800-307-7475
With Your Specific Application

Why AiRTX Air Amplification Products

- Save money on compressed air 50-90%
- Increase volume of air flow – 90 times
- Nozzles meet OSHA Standards
- Relieves duty cycle of air compressor- reduces repair cost
- Reduce noise levels 50 dBA or more

What Is The Cost Of Compressed Air?

A 100 Hp compressor cost approximately $35,000 per year to operate.

Power Cost = $\frac{\text{Hp x 0.746 x hour x rate}}{\text{motor efficiency}}$ = $34,800

OR

Power Cost = $\frac{\text{100 x 0.746 x 6,000 x 7¢ kw}}{\text{90\%}}$ = $34,800

What are YOU paying for that outdated Copper Tube, Pipe Nipple or Plastic Nozzle?

Look below for savings of 50-90% of your electric bill with AiRTX Nozzles. You may not need that new additional Air Compressor.

Conventional Air Movers - Consumption and Costs

	Size	Air Consumption LPM				Cost per 1000 Cu. Ft. @ 100 psi	
		80 psi	LPM	100 psi	LPM	Per Day	Per Year
Pipe Nipple	3/8" x 2'	290	8207	350	9905	$41.60	$10,858
Copper Tube	1/4" x 1'	36	1019	42	1189	$ 5.04	$ 1,310
Copper Tube	1/2" x 1'	190	5377	240	6792	$28.80	$ 7,488
Hole in Pipe	1/8"	18	509	22	623	$ 2.64	$ 686
Hole in Pipe	1/4"	70	198	86	2434	$10.80	$ 2,288
AiRTX Model 48009 15 cfm @ 80 psi						**$ 1.76**	**$ 458**

Cost is based on $0.25 per 1000 cu. ft. of air per hour and duty cycle of 8 hours a day, 260 days per year. LPM = cfm x 28.3

Want To Know How Much Air You Are Using? Compressed air discharge to atmosphere through sharp, square edged orifice and sea level cfm

Compressed Air Flow Through Orifice Chart – Orifice Diameter in Inches

psi	1/64	1/32	3/64	1/16	5/64	3/32	7/64	1/8	5/32	3/16	7/62	1/4	5/16	3/8	1/2	3/4	1
20	0.12	0.49	1.07	1.90	2.97	4.28	5.84	7.59	11.8	17.0	23.1	30.4	47.2	68.6	122	269	468
30	0.15	0.63	1.39	2.47	3.87	5.58	7.60	9.89	15.4	22.2	30.4	39.6	61.5	89.4	158	350	634
40	0.19	0.78	1.72	3.05	4.77	6.08	9.38	12.20	19.0	27.3	37.5	48.8	75.8	110.0	195	432	781
50	0.23	0.92	2.04	3.62	5.67	8.17	11.10	14.50	22.6	32.5	44.6	57.0	90.1	131.0	232	513	929
60	0.26	1.07	2.37	4.20	6.57	9.46	12.90	16.80	26.2	37.7	51.6	67.2	104.0	152.0	269	595	1075
70	0.30	1.21	2.69	4.77	7.47	10.80	14.70	19.10	29.7	42.8	58.8	76.4	119.0	173.0	306	676	1223
80	0.33	1.37	3.02	5.35	8.37	12.10	16.50	21.40	33.3	48.0	65.8	85.6	133.0	193.0	343	757	1371
90	0.37	1.52	3.37	5.92	9.27	13.40	18.20	23.70	36.9	53.2	72.9	94.8	148.0	214.0	379	839	1518
100	0.41	1.66	3.66	6.50	10.20	14.70	20.00	26.00	40.5	58.3	80.0	105.0	162.0	235.0	416	920	1664

AiRTX Air Amplification

AiRTX Air Amplification Products gives you More Performance with Less Noise

OSHA Safety Regulations

- Eye protection necessary where using compressed air to remove particles.
- Safety compressed air nozzles should not exceed 30 psi blowing force.
- Safety compressed air nozzles should prevent dead ending pressure from reaching a person's skin. Vent hoses or slots are necessary so that the full force of the compressed air from a nozzle or tube has a release route to prevent skin impingement of foreign matter from the compressed air line

Noise level of AiRTX Air Amplifiers and Nozzles

Model	Noise level dBA	psi	cfm
38038	76	@80	15
48009	72	@80	15
15008	72	@80	15
15015	76	@80	20
85006	72	@80	24
85012	72	@80	48
38050	74	@80	15

General Information on Noise in the Work Place

Sound Level	Application	Recommended NIOSH Tolerance (w/o ear protection)
110	1/2" Open Pipe	30 min.
105	3/8" Open Pipe	1 hr.
102	1/4" Copper Tube	90 min.
92		6 hrs.
90		8 hrs.
85	Targeted sound levels for most manufacturing facilities	
60	Normal conversation — An increase or decrease of 10% in sound levels makes a substantial difference in the ear damaging effects of noise	

Air Pressure - Some common causes of low air pressure —

- Demand is too high for supply — machines do not perform at peak efficiency
- Air leaks — plant average is 20% of lost capacity
- Undersized piping or connections
- Friction loss from length, pipe bends, old pipes with internal corrosion

Characteristics Of Air Pressure in Hose

Pressure Drop Due to Friction in *Hose* 100 psi 50 Foot Lengths

cfm	Hose Inside Diameter				
	1/4"	3/8"	1/2"	3/4"	1"
10	1.6	0.7	—	—	—
20	9.0	4.1	0.7	0.2	—
30	26.8	8.6	2.3	0.4	0.1
40	43.7	17.5	4.8	0.6	0.2
50	60.6	29.6	8.4	1.0	0.2
60	—	49.7	13.3	1.4	0.4

Characteristics Of Air Pressure in Pipe

Pressure Drop Due to Friction in *Pipe* 100 psi 50 Foot Lengths

cfm	Nominal Pipe Size				
	1/4"	3/8"	1/2"	3/4"	1"
10	1.8	0.5	0.3	—	—
20	9.4	4.7	1.3	0.2	—
30	28.6	9.2	3.0	0.5	0.13
40	46.3	18.7	5.1	0.8	0.23
50	64.4	31.0	9.6	1.3	0.35
60	—	53.2	15.0	1.9	0.50

Recommended Air Hoses

Approx. Air Consumption (cfm)	Minimal Air Hose Size (Inches) Length of Run		
	0'-10'	10'-50'	50'-200'
0-20	5/16	3/8	1/2
20-40	3/8	1/2	1/2
40-75	1/2	1/2	3/4
75-120	3/4	3/4	1
120-140	1	1	1-1/4

Call the AiRTX Air Line
for Free Technical Support
1-800-307-7475
E-mail Us at
sales@airtx.com
Visit Our Website at
airtx.com

AiRTX Hurricane Air Knives

Double *the Air Volume of other Air Knives!* *(50:1 Air Amplification)*

▲ **Hurricane Air Knife Model 86006 (*Aluminum*)**

AiRTX Air Knives Advantages

- **50:1 Air Flow Amplification**
- Wide area blow-off or cooling with less noise
- Replace open Jets with AiRTX Air Knives
- Low initial and operating costs
- Up to 70% less compressed air usage than open air lines
- Easy to control flow/force
- Instant on/off
- No rotating machinery, guards or clumsy ducts
- No maintenance, no moving parts
- No electricity or explosion hazard
- No RF/EMI interference

Use Them For

- Removing water from sheet plastic or metal
- Blowing off chips, trim scrap and swarf
- Parts cleaning before painting
- Creating an "air wall" between processes
- Cooling extruded parts
- Cleaning/cooling of metal strip and plastic/paperwebs
- Cleaning/cooling of conveyors and conveyorized parts

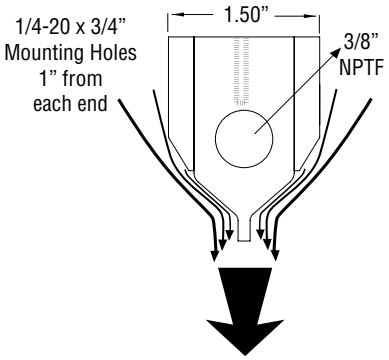

Entrained Air from both sides versus conventional one sided Air Knives (50:1 air amplification)

▲ **End View Hurricane Air Knife**

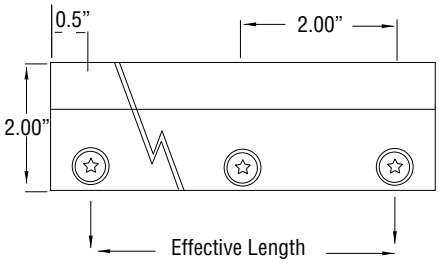

▲ **Side View Hurricane Air Knife**

AIR KNIVES
Overall length is 1" longer than effective length to allow for air connection to either end.
SHIMS
Air Knives over 18" should be supplied with air from both sides. Increase air flow from the Air Knife by installing additional .003" shims. Stainless Steel shims are available for high heat applications.
Custom sizes availa*ble*.

Part Number - Series 80000 Air Knives:
1st digit 8 represents Air Knives Series
2nd digit 5 is aluminum
2nd digit 0 is stainless steel
2nd digit 6 is aluminum Hurricane
2nd digit 2 is SlimLine
3rd digit 1 = with filter
3rd digit 2 = w/ Filter and regulator
Last 2 digits is effective length

Hurricane Air Knife Performance Chart

Air Pressure psi					
	20	40	60	80	100
Air Usage/Inch with .003" Shim					
CFM	2.9	3.7	4.4	6	8.3
LPM	82	105	125	170	235

Hurricane Air Knife & Standard Air Knife

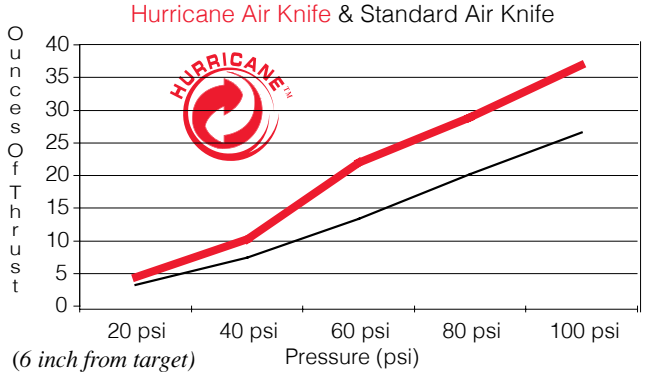

(6 inch from target)

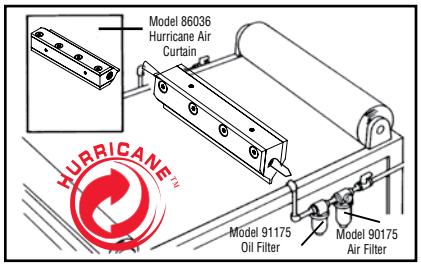

Textiles

The Model 86036 Hurricane Air Knives are ideal for cleaning and drying large rolls of cloth.

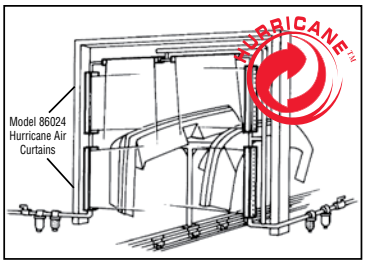

Drying and Finishing

Model 86024 Hurricane Air Knife dries and eliminates dust from these automobile fascia prior to printing. Operating with a fraction of the compressed air of open air lines, Air Knives are quiet and energy efficient.

AiRTX Air Knives

Why Settle For Less Than The Best

▲ Air Knife Model 85012 *Aluminum*

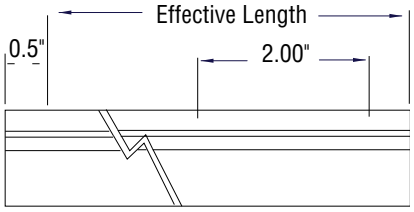

▲ Side View *Aluminum* Air Knife

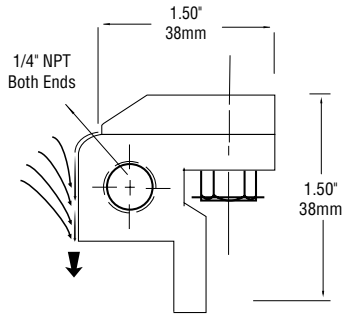

Entrained Air versus conventional Open Air Lines (25:1 air amplification)

▲ End View *Aluminum* Air Knife

▲ Air Knife Model 80012 *Stainless Steel*

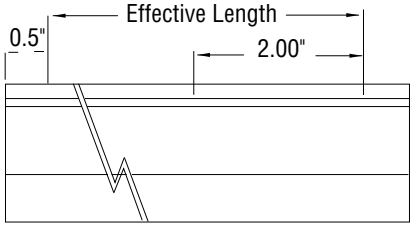

▲ Side View *Stainless Steel* Air Knife

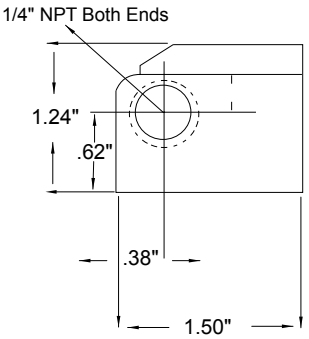

▲ End View *Stainless Steel* Air Knife

AIR KNIVES
Overall length is 1" longer than effective length to allow for air connection to either end.
SHIMS
Air Knives over 18" should be supplied with air from both sides. Increase air flow from the Air Knife by installing additional .003" shims. Stainless Steel shims are available for high heat applications.
Custom sizes available.

Part Number - Series 80000 Air Knives:
1st digit 8 represents Air Knives Series
2nd digit 5 is aluminum
2nd digit 0 is stainless steel
2nd digit 6 is aluminum Hurricane
2nd digit 2 is SlimLine
3rd digit 1 = with filter
3rd digit 2 = w/ Filter and Regulator
Last 2 digits is effective length

Air Knife Performance Chart

Air Pressure psi					
	20	40	60	80	100
Air Usage/Inch with .003" Shim					
CFM	2.2	3.0	3.5	4.3	5.4
LPM	62	85	99	122	153

Call the AiRTX Air Line for Free Technical Support
1-800-307-7475
E-mail Us at
sales@airtx.com
Visit Our Website at
airtx.com

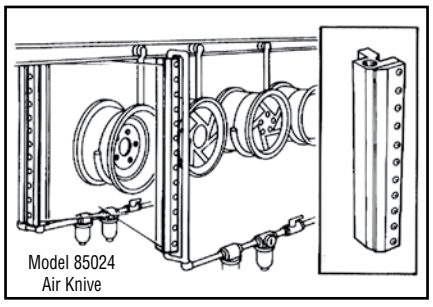

Powder Coating and Curing

The Model 85024 Aluminum Air Knife cool wheel rims as they exit powder coating ovens.

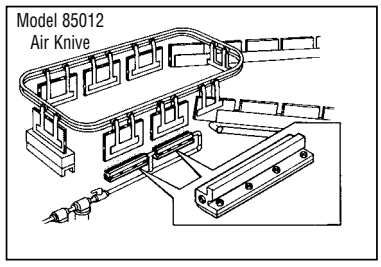

Printing and Binding

High-Speed binding requires quick drying of the glue so books can be fed along the stacking conveyor. The high volume of air from the Model 85012 Air Knife speeds the outer drying of the glue so the conveyor can operate at maximum speed.

AiRTX SlimLine Air Knives

Slimmer Profile — Slimmer Cost — *Fits in Tighter Places*

▲ **Air Knife Model 82006 (*Aluminum*)**

AiRTX SlimLine Air Knives Advantages

- Slimmer Cost – 20 to 25% Cost Savings over conventional Air Knives
- Slimmer Air Usage - 30% less consumption with same 25:1 Air Amplification
- Convenient Rear Connection to compressed air source
- Quiet

Use Them For

- The Slim profile provides a perfect solution in a tight working environment

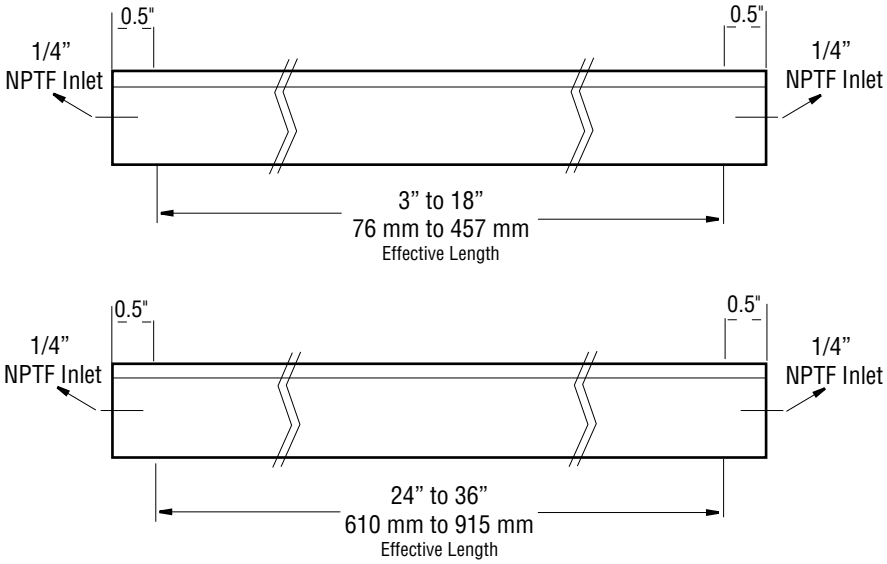

▲ **Side View SlimLine Air Knife**

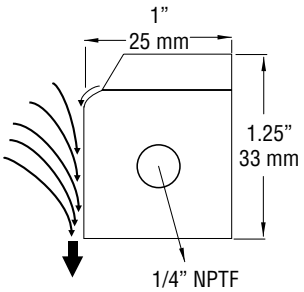

Entrained Air versus conventional Open Air Lines (25:1 air amplification)

▲ **End View SlimLine Air Knife**

Slim LIne Air Knife Performance Chart

Air Pressure psi					
	20	40	60	80	100
Air Usage/Inch with .003" Shim					
CFM	1	1.5	2.1	3	3.6
LPM	28	42	59	85	102

AIR KNIVES
Overall length is 1" longer than effective length to allow for air connection to either end.
SHIMS
Air Knives over 18" should be supplied with air from both sides. Increase air flow from the Air Knife by installing additional .003" shims. Stainless Steel shims are available for high heat applications.
Custom sizes available.

Part Number - Series 80000 Air Knives:
1st digit 8 represents Air Knives Series
2nd digit 5 is aluminum
2nd digit 0 is stainless steel
2nd digit 6 is aluminum Hurricane
2nd digit 2 is SlimLine
3rd digit 1 = with filter
3rd digit 2 = w/ Filter and regulator
Last 2 digits is effective length

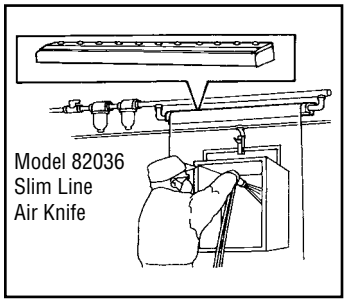

Painting

The 36" Model 82036 Slim Line Air Knife with air filter creates an air barrier and helps prevent airborne powder from reaching the worker. The SlimLine construction ensures easy clean-up and long life.

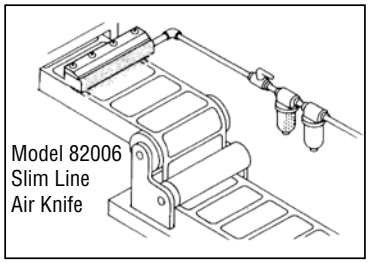

Label Printing

The Model 82006 Slim Line Air Knife cools label adhesive and holds down the ends of the labels until they reach the rollers. This reduces damage and improves quality.

AiRTX Gate Air Wipes™

2- Piece Hinged Air Amplifier Provides a Circle of High Volume, High Velocity Air While Minimizing Compressed Air Usage

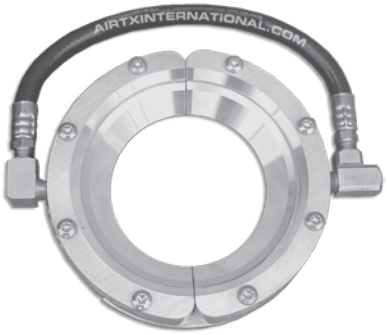

▲ The Gate Air Amplifier Model 16107 Aluminum

The Gate amplifies compressed air at a 25:1 ratio providing high air flow for cooling and drying products on all sides. The circular air flow of The Gate™ gives an even, forceful, flow circling the product, removing water, or dirt.

AiRTX Gate Air Wipe Advantages

- Low cost
- No maintenance, no moving parts
- Easy to control flow/force
- Greatly reduced noise
- No electricity or explosion hazard
- Instant on/off

Use Them For

- Blow-off chips, trim scrap, water, dust
- Part cleaning before finishing, replacing open air lines
- Cooling Molded parts and castings
- Continuous length products, like hose, pipes
- Easy placement of products with The Gate, like open and shut operation

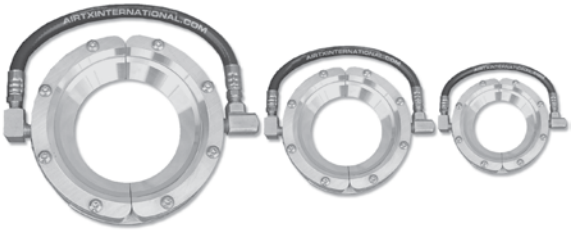

▲ 3 sizes available in Aluminum and Stainless Steel

▲ The Gate Air Wipe Easy Open and Shut Operation

Gate Air Amplifier Dimensions

SS Model#	AL Model #	A	B	C	Inlet
	16101	1"	1"	3"	1/8" NPT
		25mm	25mm	76mm	
	16102	2"	1"	4"	1/8" NPT
		50mm	25mm	76mm	
10103	16103	3"	1.5"	6"	1/4" NPT
		76mm	38mm	152mm	
10105	16105	5"	1.5"	8"	1/4" NPT
		127mm	38mm	203mm	
10107	16107	7"	1.5"	10"	1/4" NPT
		178mm	38mm	254mm	

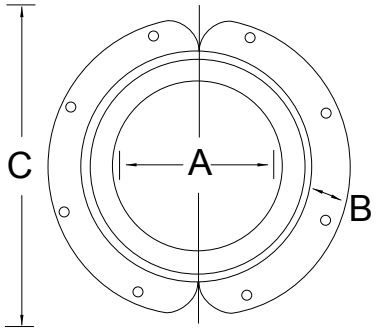

Call the AiRTX Air Line for Free Technical Support
1-800-307-7475
E-mail Us at
sales@airtx.com
Visit Our Website at
airtx.com

Gate Air Amplifier Performance Chart (.003 shim)

SS Model #	AL Model#	CFM Usage				
		20 psi	40 psi	60 psi	80 psi	100psi
	16101	8	12	16	20	26
	16102	14	18	22	26	30
10103	16103	18	24	28	32	38
10105	16105	28	38	48	54	62
10107	16107	38	56	70	80	90

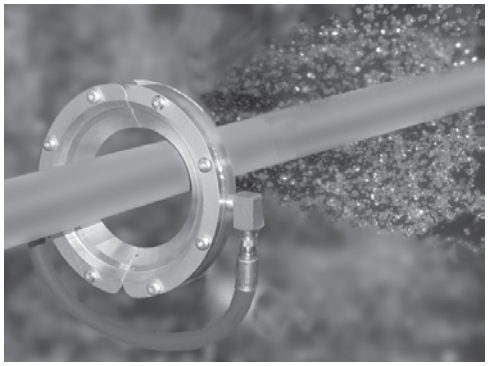

Gate Air Wipe Amplifier blowing off of a steel tube

AiRTX HURRICANE ADJUSTABLE AIR AMPLIFIERS

Adjustable, Compact, Versatile, No-Maintenance, 3000 CFM Without Motors or Dangerous Fans, No Shims Needed to Adjust Air Flow

NO SHIMS!!!!

▲ **5 sizes available in Aluminum and 5 sizes in Stainless Steel**

AiRTX Air Amplifier Advantages

- Low cost
- Adjustable output without tools or shims
- No blades, guards or clumsy duct
- No maintenance, no moving parts
- Easy to control flow/force
- Greatly reduced noise
- No electricity or explosion hazard
- Instant on/off

Use Them For

- Air conveying any material that can be moved in a rush of air: chips, sawdust, smoke, paper and cloth trim, grain, dust, capsules, powder
- Ventilation and exhaust of smoke/fumes, replacing fans
- Blow-off chips, trim scrap, water, dust
- Part cleaning before finishing, replacing open air lines
- Purging tanks
- Cooling molded parts and castings
- Cleaning/cooling of conveyed parts
- Pneumatic conveying

Air Amplifier Flow Specs at Factory (Adjustable) Setting

SS Model#	Aluminum Model #	Throat Diameter	AMP Ratio	Adj. Factory Setting
10004	15004	0.38	12.1	15 cfm
10008	15008	0.88"	12:1	15 cfm
10015	15015	1.65"	20:1	25 cfm
10025	15025	2.25"	25:1	45 cfm
10030	15030	3.00	30.1	60 cfm

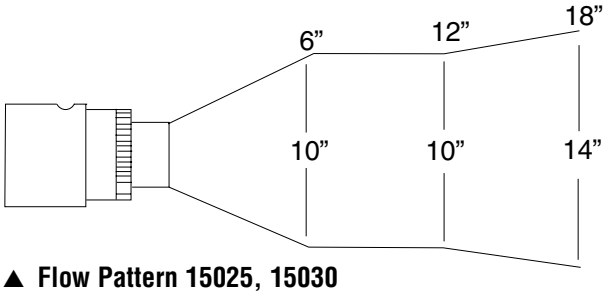

▲ **Flow Pattern 15025, 15030**

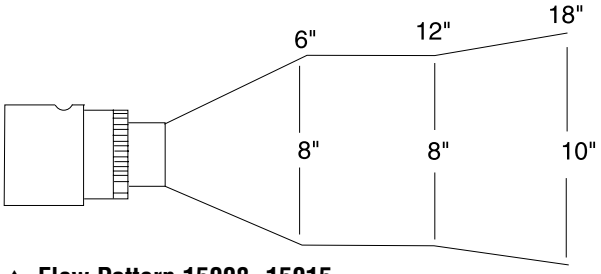

▲ **Flow Pattern 15008, 15015**

Air Amplifier Dimensions

Model SS	Model AL	A	B	C	D	E	Throat Dia.
10004	15004	.0.50 13mm"	1.25" 31mm	2.25" 57mm	.50" 12mm	1/8" NPT	.38" 9mm
10008	15008	1.25" 31mm	2.00" 50mm	3.00" 76mm	1.00" 25mm	1/4" NPT	0.88" 22mm
10015	15015	2.00" 50mm	3.00: 76mm	3.25' 83mm	1.00" 25mm	3/8" NPT	1.65" 42mm
10025	15025	2.5" 63mm	3.63" 92mm	3.63" 92mm	1.25" 31mm	3/8" NPT	2.25" 57mm
10030	15030	3.88" 98mm	5.00" 127mm	5.00" 127mm	1.50" 38mm	1/2" NPT	3.00" 76mm

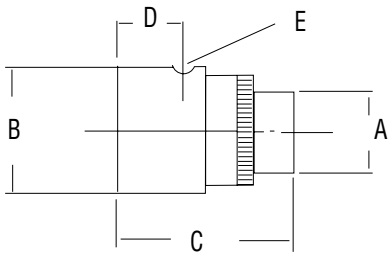

AiRTX HURRICANE ADJUSTABLE AIR AMPLIFIERS

The AiRTX Air Amplifiers releases a tiny amount of compressed air at near-sonic velocity through an adjustable internal, ring-shaped nozzle. The high-speed "tube" of air released through the front creates a strong vacuum behind itself, pulling additional surrounding air through the rear of the amplifier, while pushing the ambient air in front producing large flows of free surrounding air.

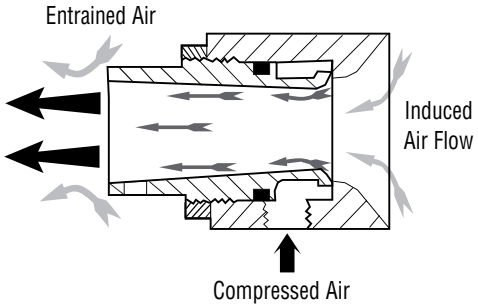

Air Amplifiers at Work

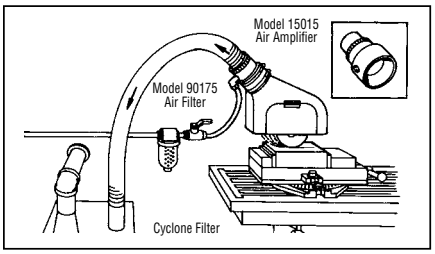

Metalworking — Grinding

A Model 15015 Air Amplifier boosts a vacuum system by 300 cfm, negating the need for a larger, more expensive system to remove grinding dust.

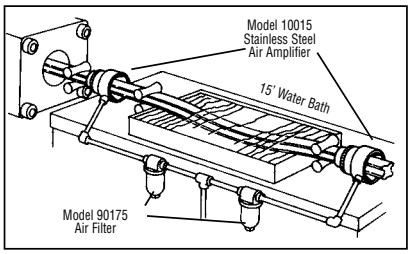

Extrusion — Rubber Molding Cooling/Drying

Model 10015 Stainless Steel Amplifiers help set-up and cool this molding after extrusion. Then, they blow off and dry the molding prior to cutting.

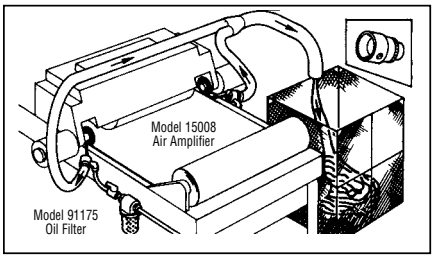

Textiles — Scrap Removal

The Model 15008 Amplifier eliminates expensive vacuums and electric motors for edge scrap removal. Amplifiers, with no moving parts, eliminate lint/dust, that can cause overheating of electric motors.

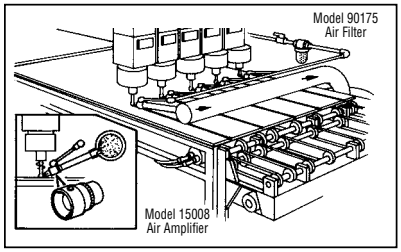

Woodworking — Sawdust Removal

Model 15008 Amplifier boosts vacuum system, ending a sawdust problem on this router. Compressed-air-operated, with no moving parts, the amplifier eliminates frequent electric motor replacement.

Model 15008R Reducer — *when used with Model 15008, reduces inlet and outlet (Dimension B) to 1.25"*

Model 15015R Reducer — *when used with Model 15015, reduces inlet and outlet (Dimension B) to 2"*

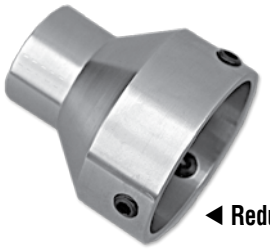

◀ **Reducer Model 15008R**

◀ **Air Amplifier with reducer, outlet and inlet size is the same for an inline flow of high volume air.**

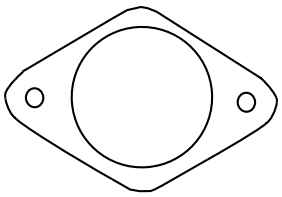

10000-31 — Use for 15015

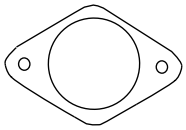

10000-30 — Use for 15008

◀ **Mounting Plate** — *10000-30 Use for 15008*
Mounting Plate — *10000-31 Use for 15015*

Mounting Plate — *10000-32 Use for 15025*
Mounting Plate — *10000-33 Use for 15030*

Call the AiRTX Air Line for Free Technical Support
1-800-307-7475
E-mail Us at
sales@airtx.com
Visit Our Website at
airtx.com

AIR AMPLIFICATION

AiRTX Air Saver Adjustable Brass High-Thrust Jets

Powerful Blow-Off with Lower Air Cost and Lower Noise than straight Compressed Air Tubes

▲ Adjustable High-Thrust Jet Model 38038E

▲ Adjustable High-Thrust Jet Model 38044

▲ Adjustable High-Thrust Jet Model 38038

Advantages of Adjustable High-Thrust Jets

- Low initial and operating costs
- Meet OSHA noise and dead-end pressure requirements
- Easy to control flow/force
- Instant on/off, no vibration
- No maintenance, no moving parts
- No electricity or explosion hazard
- No RF/EMI interference
- Adjustable flow/force
- Solid brass construction
- Model 38038 dead-ended suction @80 psi, 18 cfm is 189" water column

Use Them For

- Ejecting parts from molding machines and stamping presses
- Blow-off of chips, trim scrap and swarf
- Air conveying dusts, powders and fibers
- Part cleaning before painting
- Cooling extruded parts
- Cleaning/cooling of metal strip and plastic/paper webs
- Cleaning/cooling of conveyors and conveyorized parts

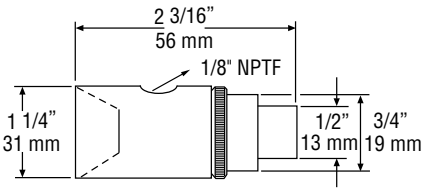

▲ Adjustable High-Thrust Jet Model 38038

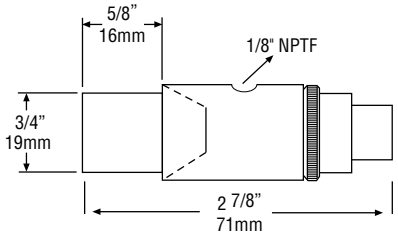

▲ Adjustable High-Thrust Jet Model 38044

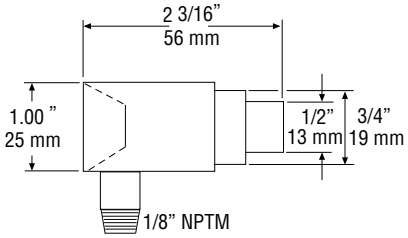

▲ Adjustable High-Thrust Jet Model 38038E

Jet Blow-Off Force in Ounces of Thrust

Distance from Target	Pressure (psi)			
	40 psi	60 psi	80 psi	100 psi
6"	7.5	11.8	16.5	22.2
12"	6.9	11.5	16.2	21.4
18"	5.6	9.3	13.7	17.4

High Thrust Nozzle set at 20 cfm @ 80 psi *Ounces x 25.35 = Grams*

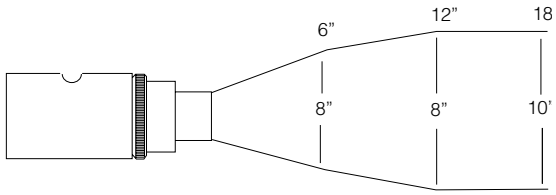

▲ Flowpattern

High-Thrust Jet at Work

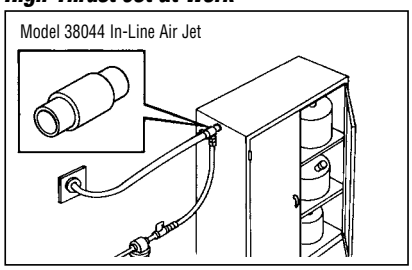

Fume Removal *A low-cost, maintenance-free AiRTX Jet system uses only 3 cfm (85 lpm) of compressed air to remove hazardous fumes from this solvent storage cabinet. The air flow amplification of Air Saver Jet Model 38044 provides the needed ventilation without dangerous fan blades or expensive electric motors.*

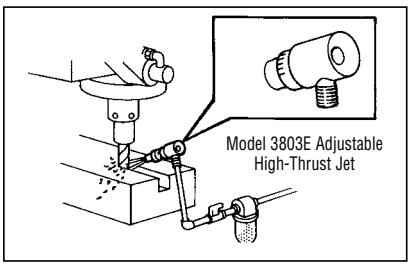

Metalworking *This milling operation is enhanced by the chip removal and cooling provided by the Model 38038E Adjustable High-Thrust Jet. The Adjustable Jet provides plenty of thrust to prevent build-up of metal chips and coolant around the tool.*

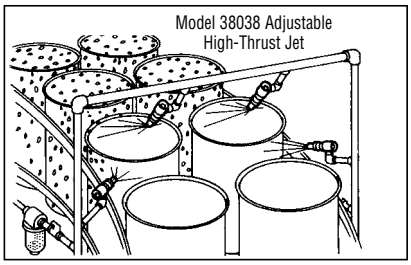

Food Processing *The Model 38038 Adjustable High-Thrust Jet removes water and dries cans in this soup processing plant. The adjustable thrust feature produces maximum drying to ensure peak line speed.*

AiRTX Air Saver Wedge™

Highest Thrust of any Blow-Off Nozzle! NO SHIMS!

▲ **Air Saver Wedge Model 38050 (*Aluminum*) with Sta-Put Hose Model 40001 and Air Saver Wedge Model 30050 (*Stainless Steel*)**

Advantages of Air Saver Wedges

- NO SHIMS
- 25:1 Air Amplification
- Low initial and operating costs
- Highest thrust of any blow-off nozzle
- Reduce compressed air costs by 30% to 50%
- Easy to control flow/force, instant on/off
- Meets OSHA noise and dead-end pressure requirements
- No maintenance, no moving parts, no vibration
- No electricity or explosion hazard
- No RF/EMI interference
- Reduces noise levels of open air lines by 30 dBA
- Provides wide blow-off for stamping, sand blasting, drying, and parts ejection
- Manifolds available for Model 38050 in series

Wedge Blow-Off Force in Ounces of Thrust

Distance from Target	Pressure (psi)			
	40 psi	60 psi	80 psi	100 psi
6"	20	28	34	39
12"	14	22	29	35
18"	10	17	24	30
Compressed Air CFM	16	22	28	32
Consumption LPM	453	623	794	906

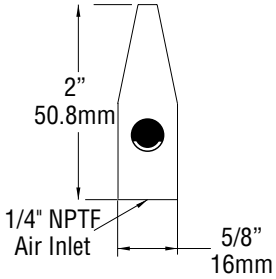

▲ **4 inch Air Saver Wedge Model 38054 (*Aluminum*) Model 30054 (*Stainless Steel*)**

Use Them For

- Ejecting parts from molding machines and stamping presses
- Blow-off of chips, trim scrap, swarf
- Part cleaning before painting
- Cooling extruded parts

Wedge Blow-Off Force in Ounces of Thrust

Distance from Target	Pressure (psi)			
	40 psi	60 psi	80 psi	100 psi
6"	40	56	68	78
12"	28	44	58	70
18"	20	34	48	60
Compressed Air CFM	32	44	56	64
Consumption LPM	906	1246	1588	1812

AIR AMPLIFICATION

AiRTX Hurricane Air Saver Wedge™

*More Power Higher Thrust with the **HURRICANE AIR SAVER WEDGE!***

▲ **Hurricane Air Saver Wedge Model 38150 (*Aluminum*) Model 30150 (*Stainless Steel*)**

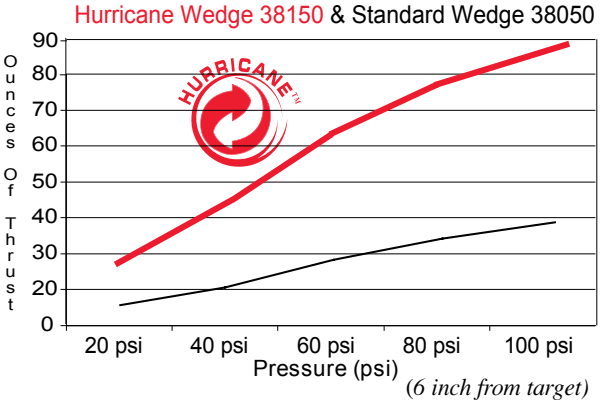

Hurricane Wedge Blow-Off Force in Ounces of Thrust

Distance from Target	Pressure (psi)			
	40 psi	60 psi	80 psi	100 psi
6"	46	64	78	90
12"	32	51	67	81
18"	23	39	55	69
Compressed Air CFM	29	40	50	58
Consumption LPM	820	1132	1415	1641

▲ **Hurricane 4 inch Air Saver Wedge Model 38154 (*Aluminum*) Model 30154 (*Stainless Steel*)**

Make your Air Saver Wedge Adjustable Without SHIMS

Model 38050-1 **Model 38450-1**

AiRTX Air Saver Force Nozzle™

Air Amplification For More Power - At a Fraction of the Cost Of Open Copper Tubes or Plastic Nozzles

▲ **Air Saver Force Nozzle**
Model 48007 (*Aluminum*)
Model 40007 (*Stainless Steel*)

Advantages of Force Nozzles

- Reduced noise level
- Increased air flow
- Strong thrust
- Low compressed air consumption

Use Them For

- Replace copper tubes and pipes
- Move large amounts of scrap
- Cleaning molds
- Blasting heavy materials

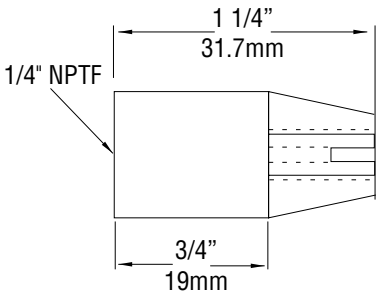

▲ **Model 48007-40007**

Nozzle Blow-Off Force in Ounces of Thrust

Distance from Target	Pressure (psi)			
	40 psi	60 psi	80 psi	100 psi
6"	9	16	21	24
12"	8	15	20	23
18"	6	13	18	21
Compressed Air CFM	9	13	15	19
Consumption LPM	255	368	425	538

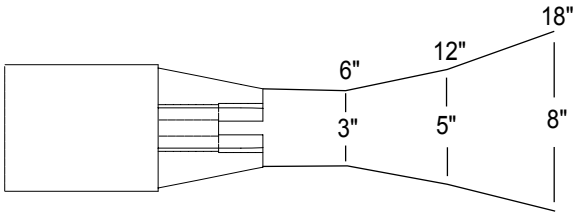

▲ **Flow Pattern**

AiRTX Hurricane Air Saver Force Nozzle™

▲ **Hurricane Air Saver Force Nozzle**
Model 48005 (*Aluminum*)
Model 40005 (*Stainless Steel*)

Advantages of Hurricane Force Nozzles

- Increased air flow
- For heavy-duty applications
- Twice the force of standard 48007
- Long reach with high thrust
- 1/4" compressed air inlet

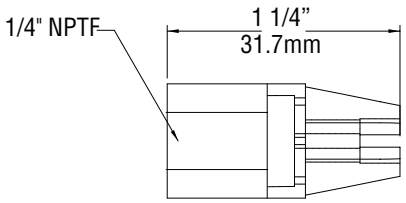

▲ **Model 48005-40005**

Hurricane Air Saver Force Nozzle Performance Chart

	Air Pressure psi			
	40 psi	60 psi	80 psi	100 psi
CFM	22	26	30	34
LPM	566	736	849	962

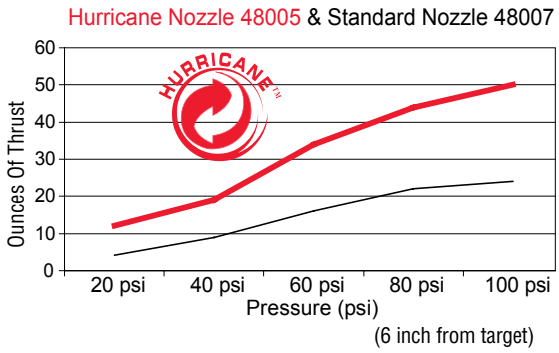

AiRTX Adjustable Air Saver Nozzles

Air Amplification And Noise Reduction

Energy Costs .....Below labor and health care, energy bills, ... may be the highest cost in your plant and energy cost continues to go UP!

▲ **Adjustable Air Saver Nozzles Model 48009 (*Aluminum*) Model 40009 (*Stainless Steel*)**

Advantages of Adjustable Air Saver Nozzles

- Generates high volume with lowest possible air consumption
- Adjustability makes them easy to adapt to existing applications and immediately cut air use to a minimum for the job
- Greatly reduces demand on the compressor
- Low initial and operating costs
- Meets OSHA noise and dead-end pressure requirements
- Easy to control flow/force

Use Them For

- Replacing direct compressed air use – pipe nipples and copper tube
- Ejecting parts from molding machines and stamping presses
- Blow-off of chips, trim scrap, swarf
- Part cleaning before painting
- Plant air conservation and noise reduction
- Cooling molded or cast parts
- Cleaning/cooling of metal strip and plastic/paper webs
- Cleaning/cooling of conveyorized or transfer line parts
- Manifolds available for multiple units

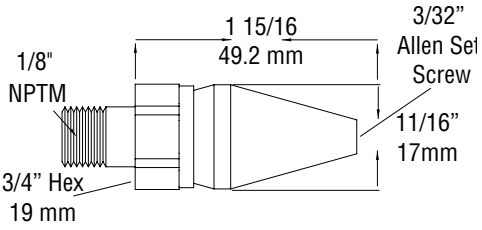

▲ **Adjustable Air Saver Nozzle Model 48009**

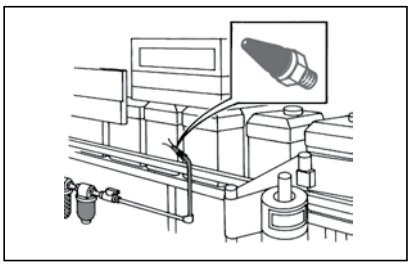

Food industry-container drying

The Adjustable Model 48009 Stainless Steel Nozzle is ideal for drying food containers prior to labeling. It will not pit or need replacement in this wet environment

Nozzle Blow-Off Force in Ounces of Thrust

Distance from Target	Pressure (psi)			
	40 psi	60 psi	80 psi	100 psi
6"	7.7	12.2	16.5	20.6
12"	7.6	11.5	15.9	20.1
18"	6.9	10.0	13.3	16.8

Air Saver Nozzle set at 15 cfm @ 80 psi

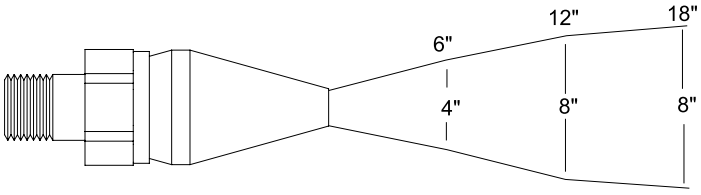

▲ **Flow Pattern**

AiRTX Hurricane Adjustable Air Saver Nozzle

Where MORE is BETTER - 50% More Thrust with the Same CFM

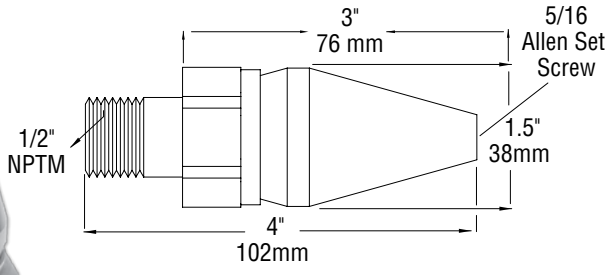

◀ **Hurricane Adjustable Air Saver Nozzles Model 48109 (*Aluminum*)**

Adjustable Air Saver Nozzle Model 48009 (*Aluminum*)

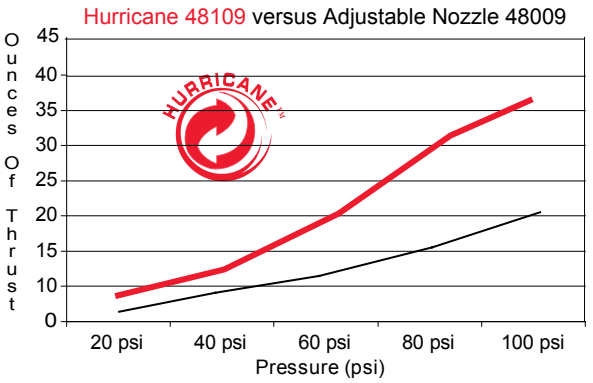

(Both Nozzles set at 20 cfm @80psi)

AIR AMPLIFICATION

AiRTX Aluminum Adjustable Flare Nozzle

Air Amplification For Longer Stream Of High Velocity Air - Use the Adjustable Flare Nozzle

▲ **Adjustable Flare Nozzle Model 48004 (*Aluminum*)**

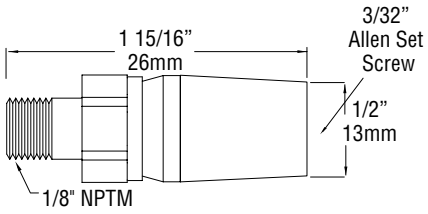

Advantages of Flare Nozzles

- Longer stream of high velocity air
- Adjustable air flow
- Set screw for locking air usage

Nozzle Blow-Off Force in Ounces of Thrust

Distance from Target	Pressure (psi)			
	40 psi	60 psi	80 psi	100 psi
6"	12	16	20	22
12"	11	15	18	21
18"	10	13	18	18

Nozzle set at 15 cfm @ 80 psi

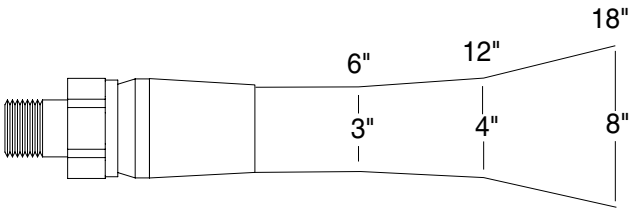

▲ **Flow Pattern**

AiRTX RubberTip Nozzle™

Air Amplification For Blow-Off Near Soft Materials

▲ **RubberTip Nozzle Model 48006**

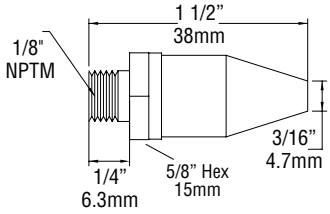

Advantages of Flare Nozzles

- Soft tip
- 25:1 air amplification
- Quiet operation

Nozzle Blow-Off Force in Ounces of Thrust

Distance from Target		Pressure (psi)			
		40 psi	60 psi	80 psi	100 psi
6"		4.5	6.1	8	11.6
12"		4	5.7	8.3	11
18"		3.7	5.2	7.5	10.8
Compressed Air Consumption	CFM	6	7	9	11
	LPM	170	198	255	311

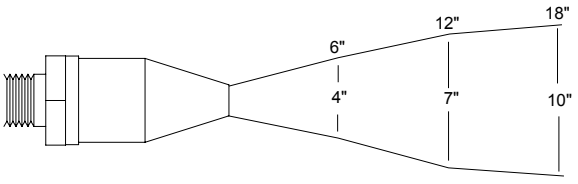

▲ **Flow Pattern**

AiRTX Locking Swivel Fitting

Accurate Positioning for Optimum Performance

▲ **Locking Swivel Fitting Model #38006-3 with Air Saver Nozzle Model 48009**

Advantages of Locking Swivel Fitting

- Use with AiRTX Nozzles and Wedges
- Accurate positioning for optimum performance

AiRTX Fixed Flow Air Saver Nozzles

"Why Pay The Energy Company More Than You Have To!"

(An open 1/4" Copper Tube could costs you $1400,00 a year) *(based on a 40 hour work week)*

48008 Brass *40008 SS* *48010 Brass* *48002 Brass/ 40002SS*

▲ **Fixed Flow Air Saver Nozzle Model 48008, 40008, 48010**

Advantages of Fixed Flow Nozzles

- Generates high thrust with lowest possible air consumption 9 cfm @ 80 psi
- 25:1 amplification ratio increases airflow without increasing compressed air consumption
- Greatly reduces demand on the compressor
- Low initial and operating costs
- Meets OSHA noise and dead-end pressure requirements

Use Fixed Flow Nozzle For

- Ejecting parts from molding machines and stamping presses
- Blow-off of chips, trim scrap, swarf
- Part cleaning before painting
- Plant air conservation and noise reduction
- Cleaning/cooling of metal strip and plastic/paper webs
- Cleaning/cooling of conveyorized or transfer line parts

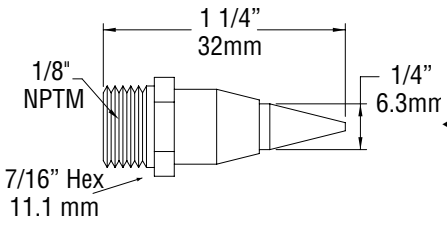

◀ **Model 48008-40008**

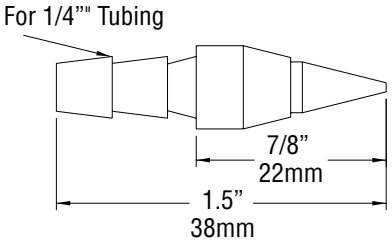

◀ **Model 48010**

Nozzle Blow-Off Force in Ounces of Thrust

Distance from Target	Pressure (psi)			
	40 psi	60 psi	80 psi	100 psi
6"	4.5	6.1	8	11.6
12"	4	5.7	8.3	11
18"	3.7	5.2	7.5	10.8
Compressed Air Consumption CFM	6	7	9	11
Compressed Air Consumption LPM	170	198	255	311

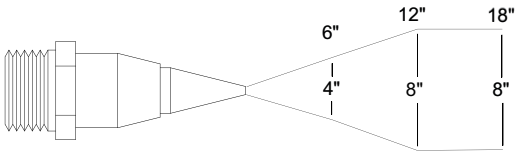

◀ **Flow Pattern**

Nozzle Blow-Off Force in Ounces of Thrust 48002/40002

	Pressure (psi)			
Compressed Air Consumption	40 psi	60 psi	80 psi	100 psi
	0.6	1.2	1.8	2.2.

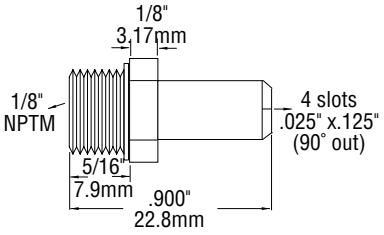

▲ **Fixed Flow Air Saver Nozzle Model 48002/40002**

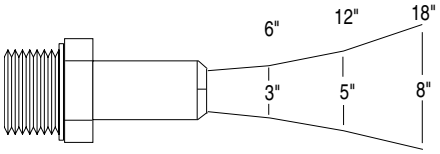

▲ **Flow Pattern**

AiRTX Hurricane 1/2" Fixed Flow Nozzle™

▲ **Hurricane 1/2" Fixed Flow Nozzle**
Model 48107 (*Aluminum*)
Model 40107 (*Stainless Steel*)

Advantages of Fixed Flow Nozzles

- High thrust at extended distances
- 1/2" fitting for large air flow
- Removing scaley or rusty parts
- Cleaning molds
- Conserves compressed air

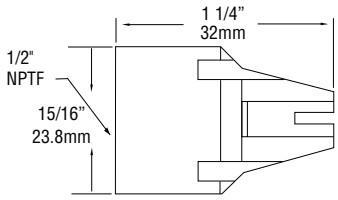

Nozzle Blow-Off Force in Ounces of Thrust

Distance from Target	Pressure (psi)			
	40 psi	60 psi	80 psi	100 psi
6"	16	24	34	46
12"	14	25	32	40
18"	12	20	28	38
Compressed Air Consumption CFM	23	28	32	35
Compressed Air Consumption LPM	650	792	906	991

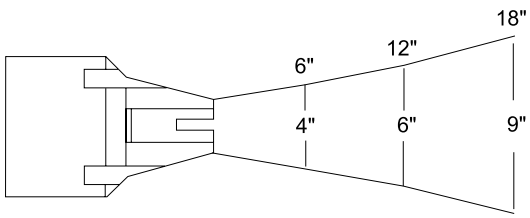

▲ **Flow Pattern**

AiRTX Air Saver Blow Guns

Adjustable Flows with 25:1 Free Air Amplification

AiRTX Blow Gun Advantages

- Meets OSHA noise, pressure, and skin impingement requirements
- Flexible Sta-Put Hoses to extend reach
- Durable heavy duty nylon construction for rugged industrial use
- Instant on/off
- Contoured and light weight design to fit comfortably in user's hand and reduce tiring even with prolonged use
- Top hook design for easy hanging and storage

Customize your Blow Gun purchase with Rubbertip Nozzle to prevent scratches on soft material, extended reach with aluminum extension or Sta-Put Hoses and a variety of nozzles for your particular application.

Three Styles to Choose From- Nylon Hand Trigger, Thumb Control and Metal Hand Trigger

Nylon, Hand Control Blow Gun

Model 48011 with Nozzle 48008

Model 48012 with Nozzle 48007

Model 48013 with Nozzle 48009

Model 48014 with Nozzle 40009

Model 48015 with Nozzle 48006

Chrome , Thumb Control Blow Gun

Model 48211 with Nozzle 48008

Model 48212 with Nozzle 48007

Model 48213 with Nozzle 48009

Model 48214 with Nozzle 40009

Model 48215 with Nozzle 48006

Metal , Hand Control Blow Gun

Model 48311 with Nozzle 40008

Model 48312 with Hurricane Nozzle 48005

Model 48313 with Hurricane Nozzle 40005

▼ *Sta-Put Series 40000, 40001 and 40002*

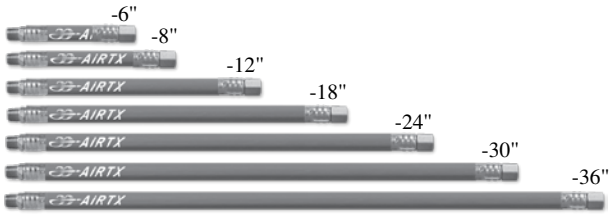

▲ **Blow Gun** *Sta-Put Hose extension and air force nozzle to amplify and conserve compressed air usage.*

▼ *Aluminum Extension Series*

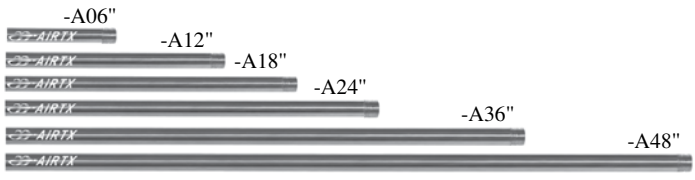

▲ **Blow Gun** *with Aluminum Extension and air force nozzle to amplify and conserve compressed air usage.*

AiRTX Sta-Put Hoses™

Air Amplification Where You Need It — Flexible Adjustment Time After Time

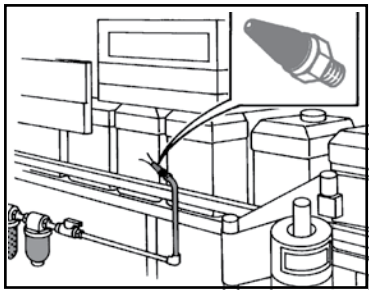

AiRTX Sta-Put Hoses Advantages

- Provides compressed air in hard to get places
- Stays flexible but holds its shape even with high pressure compressed air
- Various end fitting and lengths to adapt to air saving nozzles
- Replaces copper tubes that bend, break or crimp each time they are moved
- Provides compressed air to tight spot to cool bearings, or eject a part from a stamping machine

▼ Sta-Put Hoses

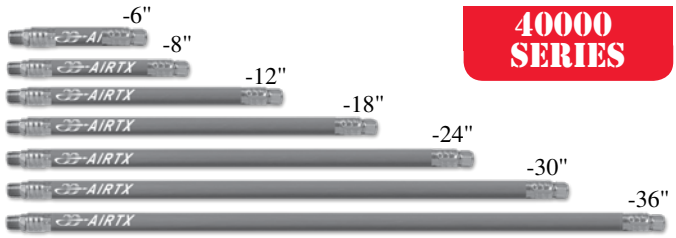

40000 SERIES

Model	Description
40000-6	6" x 3/8" Flexible Sta-Put Hose with 1/8" NPTF Fitting For Use With 40009, 48009, 48008, 1/4" NPTM Air Inlet
40000-8	8" x 3/8" Flexible Sta-Put Hose as above
40000-12	12" x 3/8" Flexible Sta-Put Hose as above
40000-18	18" x 3/8" Flexible Sta-Put Hose as above
40000-24	24" x 3/8" Flexible Sta-Put Hose as above
40000-30	30" x 3/8" Flexible Sta-Put Hose as above
40000-36	36" x 3/8" Flexible Sta-Put Hose as above

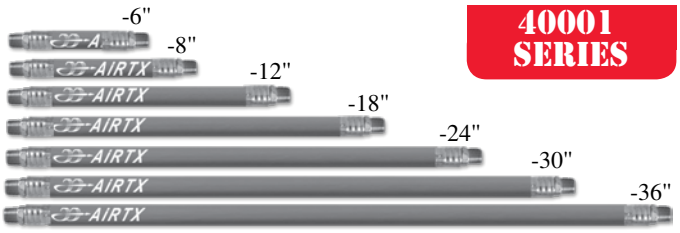

40001 SERIES

40001-6	6" x 3/8" Flexible Sta-Put Hose with 1/4" NPTM Fitting For Use With all Wedges ,48007, 1/4" NPTM Air Inlet
40001-8	8" x 3/8" Flexible Sta-Put Hose as above
40001-12	12" x 3/8" Flexible Sta-Put Hose as above
40001-18	18" x 3/8" Flexible Sta-Put Hose as above
40001-24	24" x 3/8" Flexible Sta-Put Hose as above
40001-30	30" x 3/8" Flexible Sta-Put Hose as above
40001-36	36" x 3/8" Flexible Sta-Put Hose as above

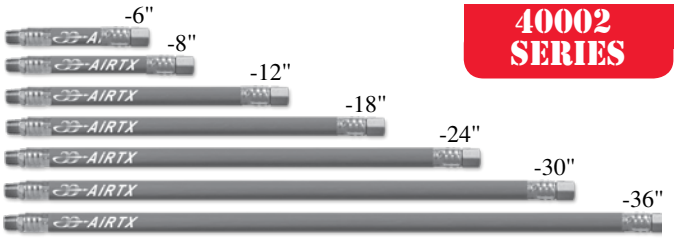

40002 SERIES

40002-6	6" x 3/8" Flexible Sta-Put Hose with 1/4" NPTF Fitting, 1/4" NPTM Air Inlet
40002-8	8" x 3/8" Flexible Sta-Put Hose as above
40002-12	12" x 3/8" Flexible Sta-Put Hose as above
40002-18	18" x 3/8" Flexible Sta-Put Hose as above
40002-24	24" x 3/8" Flexible Sta-Put Hose as above
40002-30	30" x 3/8" Flexible Sta-Put Hose as above
40002-36	36" x 3/8" Flexible Sta-Put Hose as above

Sta-Put Hose

CASE STUDY

An automotive radio parts stamping plant used 3 to 5, 1/4" open copper tubes of various lengths on each machine to help eject the parts quicker. The plant has 57 stamping machines. Moving, cleaning, and changing the dies on the stamping machines meant bending, crimping and often changing the 1/4" copper tubes to get them in the right position for blow-off.

The life of the copper tubes being replaced on each machine was 2 to 3 days. The cost to the company of replacing the tubes was 20 minutes of a maintenance man's time for cutting a new piece of tubing, cost of tubing, cost of compression fittings, time to reconnect the tube at the right spot, and down time for the machine.

The Sta-Put Hose with a 1/4" copper rod retains its shape and resists crimping or breaking. The **Model 40000 Sta-Put Hose** lasted 3 months before it needed replacing. At a cost of $22.00 versus the $28.00 for the often-replaced copper tube, the change to the Sta-Put Hoses was simple and very economical.

With the **48009 Air Saver Nozzle** in the end of the Sta-Put, the noise reduction in the plant dropped 20%. Also, the compressed air saving from the Air Saver Nozzle Model 48009 versus the open 1/4" copper tubes allowed the company to shut down a 50 Hp compressor resulting in an additional savings of $16,000 per year.

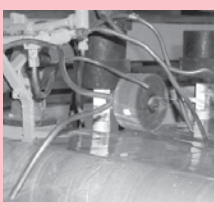

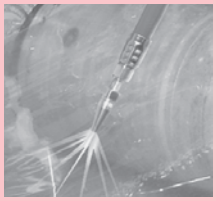

AiRTX Manifolds

Quick and Easy Installation of Blow-Off Nozzles

▼ **Model 38006 and 38012**
Available in Aluminum and Stainless Steel.

Advantages of Manifolds

- Easy to install
- Can be placed end to end for extended lengths
- Equal spacing on extended lengths
- NPT threads for airtight connections
- Adaptable to all AiRTX nozzles
- Quick and easy installation of blow-off nozzles

Use Manifolds For

- Web cleaning
- Water removal
- Parts cooling
- Air walls
- Multiple nozzles and blow-off needs
- Eliminating multiple compressed air hoses

▲ **Model 38006 and 30012** *Manifold Models 6" and 12" can be connected end to end with 38006-5 for extended lengths.*

▲ **Model 38006 with Wedges**

▲ **Model 38003 with 48009**

▲ **Model 38004 with gauge**

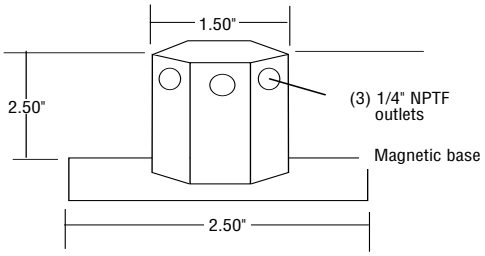

▲ **Model 38003**

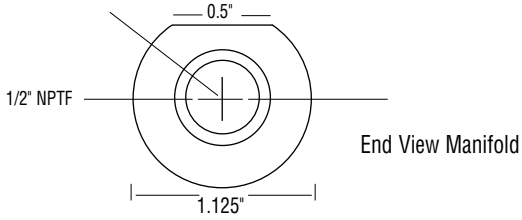

Model	Manifold Dimensions		
	A	B	# Holes
38006	.9117"	6.07"	3
38012	.8235"	12.27"	6

Models can be put together for longer lengths with 1/2" close Pipe Nipple.

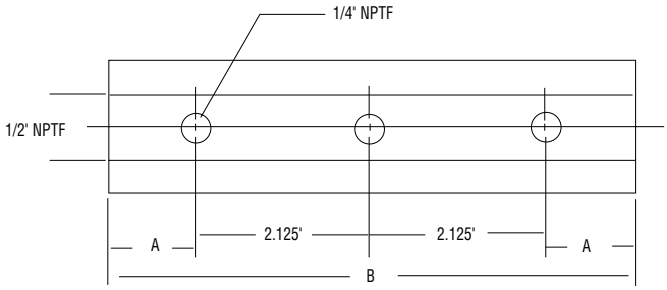

Build Your Own System with Nozzles and Manifolds or Sta-Put Hoses

▼ Manifold accessories

▲ **Model 38012 with Sta-Put Hoses and accessories**

▲ 38006-1
1/4" to 1/8" reducer

▲ 38006-2
1/4" short pipe nipple

▲ 38006-3
1/4" hex pipe plug

Use with AiRTX Nozzles/Wedges to Adjust Position

▲ 38006-4
1/4" locking swivel fitting

▲ 38006-5
1/2" short pipe nipple

AiRTX Static Elimination

Detect and Eliminate Static Electricity, Blow Away Dust, Static Cling and Spark Hazards UP TO 20 FEET

Static Electricity: You See It, You Feel It, YOU PAY FOR IT

Do your products have lives of their own, clinging, repelling, attracting dirt and shocking employees? Static electricity is annoying and dangerous. It can ruin your productivity and quality, damage electronic equipment and — worst of all — cause fire and explosions.

Why Static?

Most people associate Static with touching a door or water fountain in winter and receiving a shock. While the shock is certainly annoying it is in itself not dangerous because there is very low amperage. With low humidity, these static voltages can exceed 5000V.

In industrial applications static is caused by insulator or non-conductive material rubbing together under some pressure. When the insulator materials are separated, pools of only positive or only negative ions form and you have static. These pools of ions form not just on man made materials, (plastic, nylon, wax, paper, polyester, PVC) but also on hair, wool, fur, aluminum, wood, and rubber to name a few.

Why AiRTX Ionizing Products to Eliminate Static?

Static and Production

The amount of ions in these pools of positive or negative ions are determined by the material, humidity, and separation rate. A web operator may have to greatly reduce the speed to lower static build up. Of course this is very costly in production rates. Stacking aluminium trays with static created by a conveyer belt is almost impossible until the static is minimized. Painting a car or plastic object is difficult until the static bond of dust is broken to get a clear finish. Static causes printing ink to web, resulting in an unacceptable or unreadable job. Labels fold or lap when too much static is present. Plastic bottles will jump off a conveyor line unless given a water bath to reduce static. Pulling a single sheet of 4' x 8' plastic off a stack is almost impossible because of the static bond between the sheets.

And what about the workers? Touching a static charged door knob once a day is not like having to get shocked every time you pick up something on a production line.

In short, **Static and Production Do Not Mix.**

These are just a few areas of decreased production and increased costs.

AiRTX Shockless Static Elimination Systems can be used as productivity tools in most industries to solve static problems.

The AiRTX Advantage

- 6000V of Power means 20% more ions than other suppliers
- 7500V of Power means 35% more ions than other suppliers
- Indicator light on Ionizing Bar to show power
- Neutralizes static, blows away dirt
- Minimal compressed air, where used at all
- Adjustable air flow
- Shockless, non-radioactive neutralization source
- Maintenance-free
- Quiet
- Rugged, reliable for industrial use

Kill Static In

- Heat-set ink dryers, paper and textile drying equipment
- Electronics assembly areas or servicing of boards and components
- Around guide rods and rollers on any machinery handling web or sheet paper and plastic
- Pre-paint prep areas
- Sheet feeders, unwinders, stackers, separators
- Lenses, signs, etc.
- Packaging materials
- Pneumatic conveyors
- Injection molded parts
- Cutters and slitters for trim removal
- Photofinishing operations

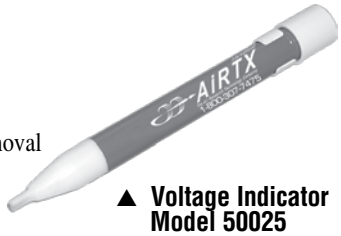

▲ **Voltage Indicator Model 50025**

Call the AiRTX Air Line for Free Technical Support
1-800-307-7475
E-mail Us at
sales@airtx.com
Visit Our Website at
airtx.com

AiRTX Power Supply

POWER SUPPLY- *the heart of it all - supplies power for all of the ionizing equipment*

Connecting Ionizing Bar, Ionizing Air Knife, Ionizing Gun and Ionizing Nozzles to Power Supply

▲ **Power Supply 7500V (4 Port Unit) Model 50000 (115V) or Model 50000-1 (230V) Lighted Power Indicator**

▲ **Power Supply 6000V (2 Port Unit) Model 50002 (115V) or Model 50002-1 (230V) Lighted Power Indicator**

The AiRTX Power Supply Advantage

- Plug-in appliance hook-up
- Choice of 2 Port Unit or 4 Port Unit Power Supply
- Power surge protector
- Specially designed to prevent heat build-up, providing long life and reliability
- Power operating light
- Compact
- Both UL and CE Listed

c UL US LISTED CE

AiRTX Static Elimination Products- Eliminates STATIC UP TO 20 FEET

▲ **Ionizing Bar with Operating Power Light**

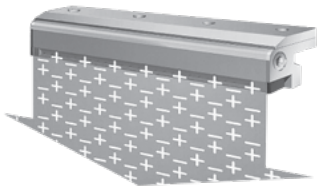

▲ **Ionizing Air Knife Long Range Static Elimination**

▲ **Ionizing Air Gun Rugged Strength**

▲ **Single Point Ionizing Nozzle Continuous Operation**

Model 55000* Series

Static Neutralization Bar

Model 55000 Series Ionizing Bars feature a unique inductively coupled design that produces powerful static neutralization, while remaining shockproof. It is ideal for sheet, webs and shallow three-dimensional parts. The Bar can be positioned up to 6" from the target. It is supplied with 8' of cable. Body is anodized aluminum, with Stainless Steel emitter pins in plastic molding. Inductive operated Power Light indicates On/Off operation. Available lengths of 3" to 112" (76-2845 mm).

Model 55500* Series

Ionizing Air Knife

With a Model 55000 Series Ionizing Bar attached to an AiRTX Air Knife, you can deliver static-neutralizing ions to a target at distances up to 20 ft. (6 m). It's ideal for web/sheet stock, conveyorized product, extrusions, or arrangement in halo shape to wrap your product in ionized air. Quiet, maintenance-free and a miser with compressed air, the knife is available in all standard knife lengths or (optionally) in custom lengths.

*Last 2 digits of part number indicates effective length.

Model 50003

Ionizing Air Gun

The Ionizing Air Gun is perfect for spot cleaning needs, coupling one of our Ionizing Nozzles with a hand-held Air Gun. Weighing only 11 oz (300 g), it's light enough to be used for extended periods.

The Air Gun consumes only 12 cfm at 80 psi, 74 dBA @ 80 psi

(Power Cable included).

Model 50006

Ionizing Nozzles

Ionizing Nozzles deliver neutralized air to a target from long range. In addition, they blow away contaminants. Series installation allows them to be linked on a single cable. Used on conveyor applications or where stationary production cleaning and static neutralization is done.

Must indicate the needed length of cord.

AiRTX Shockless Static Elimination Systems can be used as productivity tools in most industries to solve static problems.

AiRTX Ionizing Bar

The Ionizing Bar is powered by 6000V or 7500V Power Supply for Maximum High Speed Static Elimination

The Ionizing Bar incorporates a unique inductively coupled design, which achieves powerful static neutralization with complete shockproof operation.

Operation

The typical AiRTX Static Elimination installation consists of one or more Ionizing Bars connected to an AiRTX Power Supply unit

▲ **Ionizing Bar Model 55006 with shielded power cord for long life protection and operating Power Light**

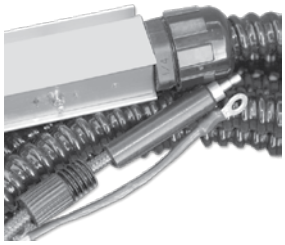

▲ **Ionizing Bar with Power Light, shielded power cord, quick bayonet connect end to Power Supply**

▲ **Power Supply (2 Port Unit) Model 50002 (115V) Model 50002-1 (230V)**

▲ **Power Supply (4 Port Unit) Model 50000 (115V) Model 50000-1 (230V)**

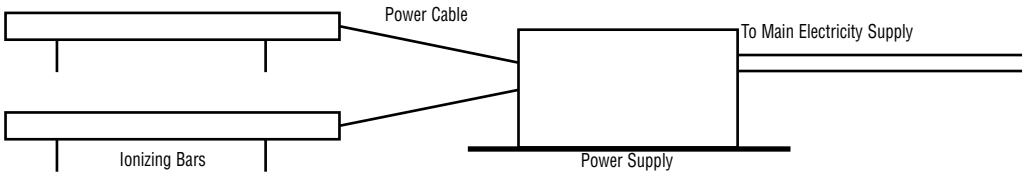

The 50002 Power unit converts the primary, (115/230V) electricity supply into a high voltage, (6000V) low amperage output. This output energy is transferred to the AiRTX Bar through the power cable. A capacitive coupling inside the bar reduces the energy to a level which is completely shock-proof but creates a large potential of ions for neutralization.

The Stainless Steel pins in the bar emit this energy (Corona Discharge) in the form of a field of ionized air. This ionized air corona supplies ions of both polarities. Thus it is able to neutralize static charges of positive or negative. When a statically charged object or material passes through this corona, the free moving ions are attracted to the opposite charge on the material. In this way the static electricity is neutralized. The ions are emmited up to 6" from the bar and have a life of approximately 2 seconds before they recombine with themselves or the atmosphere.

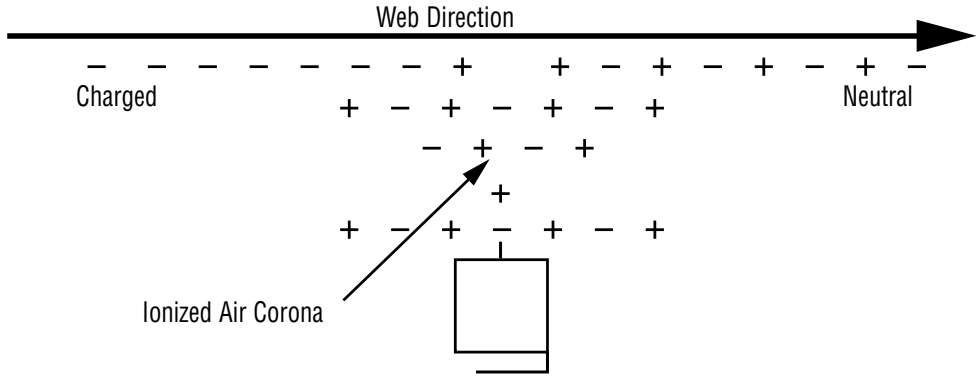

Standard Models:*

Model	Description
55003	3" Ionizing Bar Only
55006	6" Ionizing Bar Only
55012	12" Ionizing Bar Only
55018	18" Ionizing Bar Only
55024	24" Ionizing Bar Only
55030	30" Ionizing Bar Only
55036	36" Ionizing Bar Only

**Last 2 digits of part number indicate effective length.*

All units use Model 50002 as the power source.

Custom lengths available up to 112" (2845 mm)

AiRTX Ionizing Bar Advantages

- Anodized Case
- Heavy-duty shielded power cable for long life and protection
- Quick connect plug-in to power supply
- Stainless Steel emitter points
- Shockless operation
- Static elimination 6" from bar and 20' from ionizing bar using the AiRTX Air Knife
- 6000V of Power means 20% more ions than other suppliers with 5000V power supplies
- Indicator light on Ionizing Bar to show power
- 7500V of Power means 35% more ions than other suppliers with 5000V power supplies

Use Them For

- Pre-paint prep areas
- Sheet feeders, unwinders, stackers, separators
- Lenses, signs, etc.
- Packaging materials
- Pneumatic conveyors
- Injection molded parts
- Cutters and slitters for trim removal
- Heat-set ink dryers, paper and textile drying equipment
- Around guide rods and rollers on any machinery handling web or sheet paper and plastic
- Electronics assembly areas or servicing of boards and components
- Photofinishing operations

Ionizing Bars 55000 Series

Model#	Effective Length	Overall Bar Length
55003	3" 76 mm	4.5" 114 mm
55006	6." 152 mm	7.5" 191 mm
55012	12" 305 mm	13.5" 343 mm
55018	18" 457 mm	19.5" 495 mm
55024	24" 610 mm	25.5" 648 mm
55030	30" 762 mm	31.5" 800 mm
55036	36" 914 mm	37.5" 953 mm

Custom lengths available up to 112" (2845 mm)

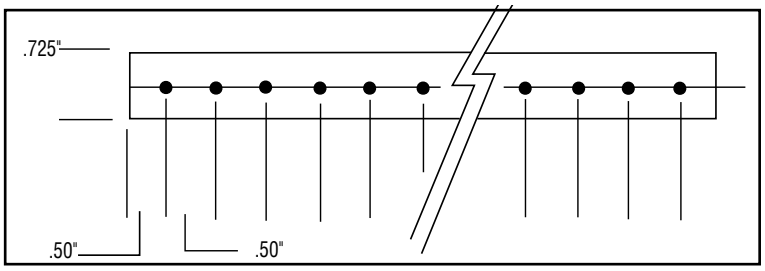

▲ **Ionizing Bar**

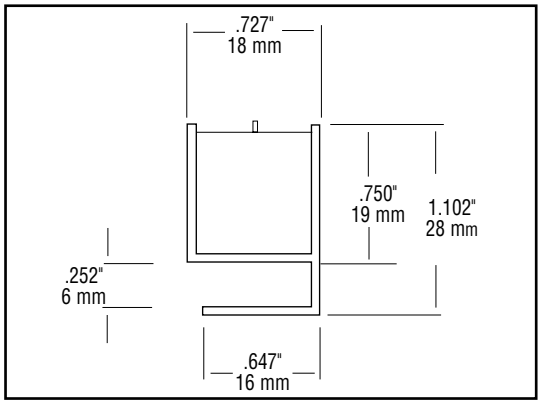

▲ **Ionizing Bar Model 55000** *(end view)*

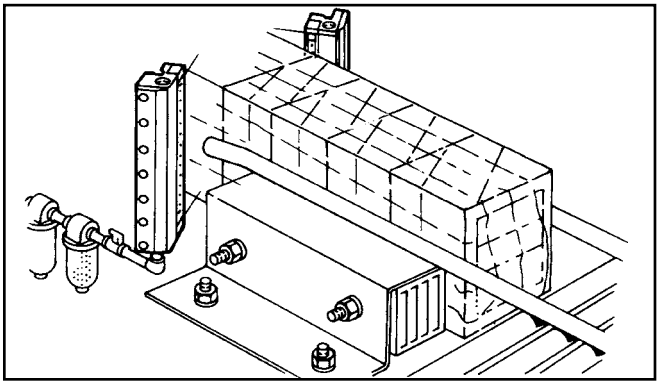

Packaging

Static caused packaging jams and wasted valuable production time until two Model 55412 ionizing Air Curtains were installed in this heat sealing process. Low pressure, ionized air eliminates the static charge and allows greatly increased line speed.

Technical and Construction:

OPERATING VOLTAGE	6000V, 7500V
MAX TEMPERATURE	185°F 85°C
EMI/RFI EMISSIONS	AiRTX cable meets international standards
HOUSING	Anodized Aluminum
WEIGHT	8.8 oz per ft.
OZONE	Considerably below international standards of 0.1 PPM
PIN	Stainless steel pin is inductively coupled. Touching pins will not result in a shock

Correct Positioning is Vital to the Efficient Operation of Static Elimination Bars

Factors to be considered are:

1 Correct positioning relative to the problem, i.e., immediately before problem area, with no intermediary rollers or processes which could regenerate the charge.

2 Speed of material — higher speeds require more static elimination.

3 Conductivity and density of material. The less conductive or more dense (molecularly) the material, the more stubborn will be the charge.

4 Grounding — vitally important to the correct operation of bars. They will not function and will become “live" if not properly grounded.

The Following Rules Should Be Observed When Installing AiRTX Ionizing Bars

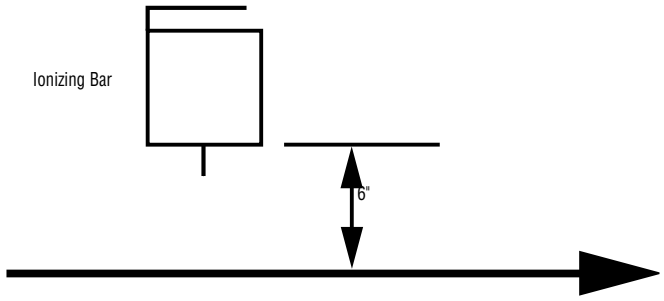

Optimal Distance from Material to Be Neutralized

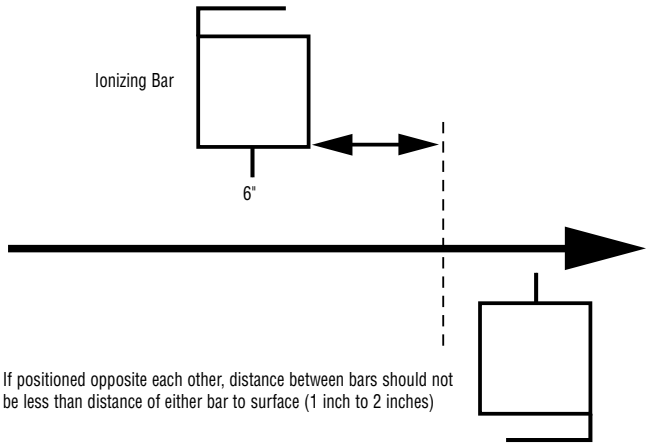

If positioned opposite each other, distance between bars should not be less than distance of either bar to surface (1 inch to 2 inches)

Bars Should Be Staggered if Positioned on Opposite Sides of the Material

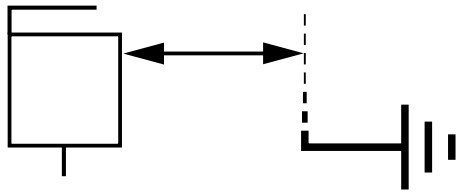

The bar should not "see“ a grounded object. Grounded objects will distort the corona and reduce its efficiency. Distance from grounded object should not be less than distance from surface (1" to 2")

Avoid Proximity to Grounded Parts of the Machine

Maintenance:

The only maintenance required is that the Bar should be cleaned periodically to keep it free from dust and other contaminants. Particulate build-up on the emitter point can result in a “burn-out".

1. Make certain power unit is turned off.

2. Use a soft brass brush or toothbrush to clean emitter points.

3. A cleaning solvent or blowing off with compressed air, used in conjunction with the brush, is even more effective.

CAUTION: This Equipment Is Not to Be Used in Hazardous Vapor Areas!

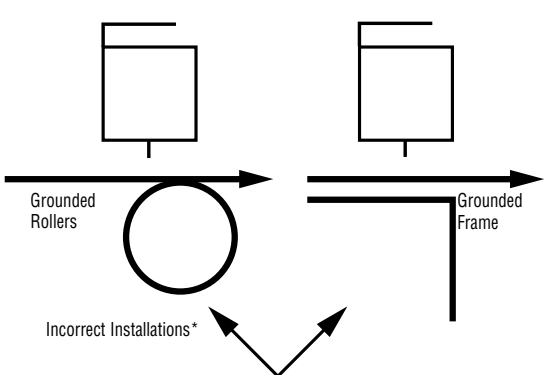

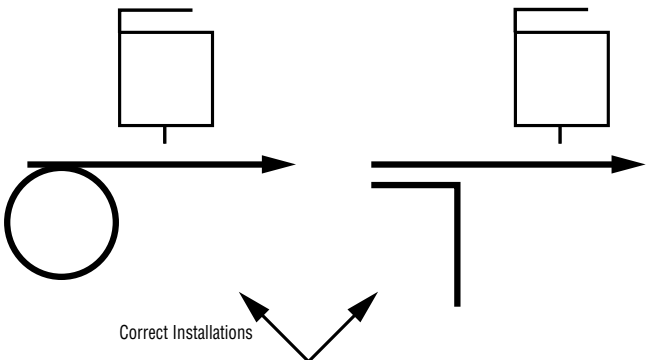

*NOTE: In some cases only a small amount of open air is needed for effective static neutralization over a grounded object. Examples: over a stack of sheets while feeding, or on a feedboard of a printing press.

There Should Be Free Air on the Opposite Side of the Material to Be Neutralized

AiRTX Ionizing Bar with Air Knife

Optimum Static Eliminator (distance up to 20 feet-6 meters)

▲ **Ionizing Bar with lighted power indicator and Air Knife**

AiRTX Ionizing Bar with Knife Advantages

- More power from 7500V power source
- Anodized aluminum case
- Neutralizes static, blows away dirt
- Minimal compressed air, where used at all
- Adjustable air flow
- Shockless, non-radioactive neutralization source
- Low maintenance
- Quiet
- Rugged, reliable for industrial use
- Indicator light on Ionizing Bar to show power

Use Them For

- PC board cleaning
- Automatic feeder
- Sheet cleaning
- Facia cleaning before painting
- Blow molding
- Debris removal
- Injection molding
- Parts cleaning
- Web handling

The positive and negative ions emitted from the pins of the Static Bar (Model 55000) have a life of approximately 2 seconds before they recombine with the atmosphere.
The AiRTX Air Knife provides a smooth laminar flow of air. The flow of smooth air doesn't have the turbulence of fan driven air and can **carry positive and negative ions up to 20 feet from the bar and provide neutralization within the 2 seconds before recombining with the atmosphere.** The turbulence created by the fan causes the ions to bump into each other so that the distance of ionization is reduced to 10" - 12".

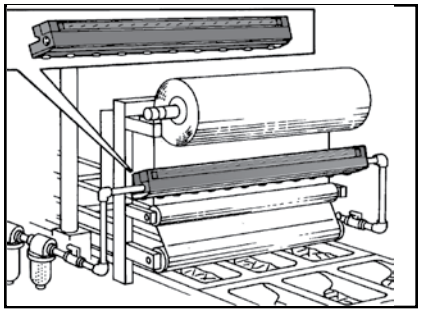

▲ **The Ionizing Air Knife can stop static build-up in all types of plastic and paper roll or sheet stock.**

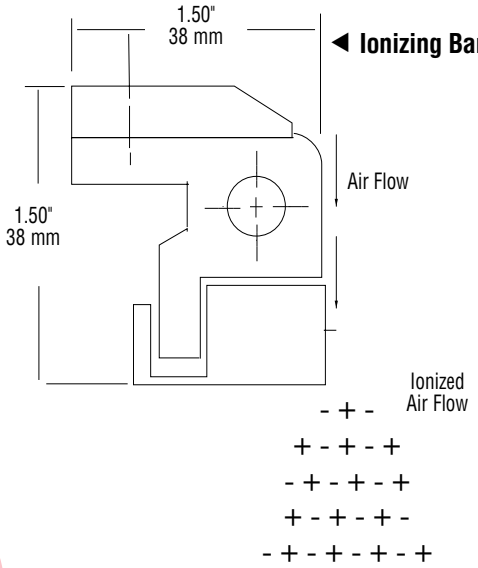

◀ **Ionizing Bar Aattached to an AiRTX Air Knife**

Model	Description
(8' Power Cord Included)	
55003	3" Ionizing Bar
55503	3" Ionizing Bar w/ Air Knife
55403	3" Ionizing Bar w/ Air Knife and 6000V (2) Outlet Power Supply, Air Filter
55006	6" Ionizing Bar
55506	6" Ionizing Bar w/ Air Knife
55406	6" Ionizing Bar w/ Air Knife and 6000V (2) Outlet Power Supply, Air Filter
55012	12" Ionizing Bar
55512	12" Ionizing Bar w/ Air Knife
55412	12" Ionizing Bar w/ Air Knife and 6000V (2) Outlet Power Supply, Air Filter
55018	18" Ionizing Bar
55518	18" Ionizing Bar w/ Air Knife
55418	18" Ionizing Bar w/ Air Knife and 6000V (2) Outlet Power Supply, Air Filter
55024	24" Ionizing Bar
55524	24" Ionizing Bar w/ Air Knife
55424	24" Ionizing Bar w/ Air Knife and 6000V (2) Outlet Power Supply, Air Filter

Model	Description
(8' Power Cord Included)	
55030	30" Ionizing Bar
55530	30" Ionizing Bar w/ Air Knife
55430	30" Ionizing Bar w/ Air Knife and 6000V (2) Outlet Power Supply, Air Filter
55036	36" Ionizing Bar
55536	36" Ionizing Bar w/ Air Knife
55436	36" Ionizing Bar w/ Air Knife and 6000V (2) Outlet Power Supply, Air Filter
55042	42" Ionizing Bar
55542	42" Ionizing Bar w/ Air Knife
55048	48" Ionizing Bar
55548	48" Ionizing Bar w/ Air Knife

• Last 2 digits of part number indicate ionizing effective length

Pre-painting

The halo configuration provides complete surface coverage of casket lid for optimum static neutralization and cleaning before paint operation.

Printing

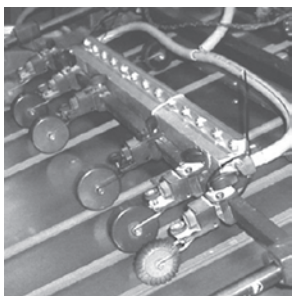

Model 55536 *is used to eliminate static on sheets being pulled off a stack. The Air Knife helps the process by creating an air cushion to float the sheets and allow for effective static neutralization.*

AiRTX Ionizing Air Gun and Single Point Ionizers

Minimal Compressed Air, Neutralize Static, Adjustable Air Flow — MORE POWER!

◀ Model 50003 Ionizing Air Gun

The Ionizing Air Gun is perfect for spot cleaning needs, coupling one of our Ionizing Nozzles with a hand-held Air Gun. Weighing only 11 oz. (300 g.), it's light enough to be used for extended periods. Will not pull debris from the surrounding air and blow it on the finished product. The air gun consumes only 12 cfm @ 80 psi.

▲ Ionizing Gun Model 50003

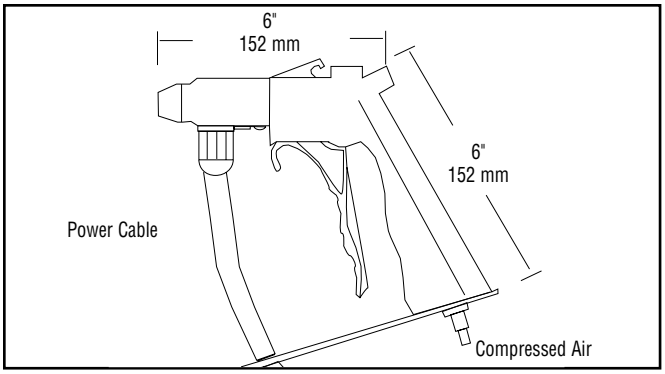

◀ Single Point Ionizer Model 50006

Ionizing Nozzles deliver static-neutralizing air to a target from long range. In addition, they blow away contaminants. Series installation allows them to be linked on a single cable.

▲ Single Point Ionizer Model 50006

When ordering AiRTX Nozzles in a series, indicate cable length between nozzles, as well as length of first nozzle to the Power Supply.

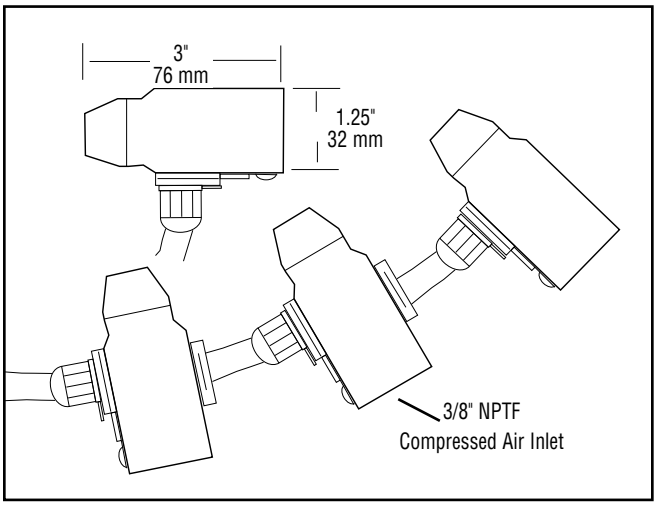

AiRTX Ionizing Gun and Nozzle Advantages

- 6000V of Power means 20% more ions than other supplier
- Neutralize static, blows away dirt
- Minimal compressed air
- Adjustable air flow
- Maintenance free – quiet
- Rugged – reliable for industrial use

Use Them For

- Around guide rods and rollers on any machinery handling web or sheet paper and plastic
- Electronics assembly areas or servicing of boards and components
- Heat-set ink dryers, paper and textile drying equipment
- Sheet feeders, unwinders, stackers, separators
- Cutters and slitters for trim removal
- Photofinishing operations
- Pre-paint prep areas
- Lenses, signs, etc.
- Packaging materials
- Pneumatic conveyors
- Injection molded parts

Model 50003 Ionizing Air Gun

c UL US LISTED

CE

◀ Power Supply Model 50002 (115V) 2 connection hook-up

AiRTX SmartVac™

SmartVac Model 90755 Operates Like a Wet/Dry Vacuum Without Electricity for Dry Materials or Wet Spills Pick-Up

Using normal shop compressed air of 80 psi, this portable vacuum creates up to 50% more vacuum than other shop vacuums and is 50% quieter than electric vacs. There are no moving parts to wear out and no maintenance. The SmartVac does an excellent job of picking up spilled fluids with the 15" wide squeegee attachment or dry chips and materials. A metal or plastic drum can be used.

The SmartVac Model 90755 system includes the SmartVac, 10' of 1-1/2" hose, on/off valve with pressure gauge, squeegee, pick-up wands, crevice tool, round brush, drum cover, bolt locking ring, filter bag and steel castered dolly for easy mobility.

The SmartVac Model 90730 includes the above items, but has a lid to fit on a 30 gallon drum.

▲ SmartVac™ *Kit Model 90755*

The AiRTX SmartVac Advantages over ShopVacs

- High vacuum
- Fast debris removal
- Heavier material pick-up
- Portable
- Rugged, reliable for industrial use
- No electricty

Standard SmartVac

Model	Description
90755	SmartVac kit for 55 Gallon Drum: 10' x 1 1/2" Hose, Metal Wand And Squeegee, Crevice Tool, Drum Cover
90755-1	SmartVac Only
90756	SmartBac Kit for 55 Gallon Drum - Without Dolly
90730	SmartVac Kit for 30 Gallon Drum -
90731	SmartVac Kit for 30 Gallon Drum - Without Drum Dolly
90720	Round Steel Dolly With Steel Casters
90751	SmartVac Air Filters - Package of Three

AiRTX StrongMan™ SmartVac™

50% HIGHER VACUUM, FASTER DEBRIS REMOVAL

The StrongMan SmartVac gets the job done!

▲ SmartVac™ *Kit Model 99755*

AiRTX Engineering Department

Alex,

Per our recent phone conversation, enclosed is the SmartVac #90755 to be converted to the StrongMan model. The StrongMan Model I received for our company is working fantastic for the dry powder sludge... GREAT JOB!.

Richard Decker
New Cumberland, WV

StrongMan SmartVac

Model	Description
99755	SmartVac kit for 55 Gallon Drum: 10' x 1 1/2" Hose Metal Wand, And Squeegee, Crevice Tool, Drum Cover, Shut-off Valve And Pressure Gauge, Lock Ring, Fittings, Drum Filter bag And Metal Drum Dolly
99755-1	StrongMan SmartVac Only
99756	SmartVac Kit for 55 Gallon Drum Without Dolly
99730	SmartVac Kit for 30 Gallon drum
99731	SmartVac Kit for 30 Gallon Drum Without Drum Dolly

AiRTX Drum Devil™ Model 90600

Liquid Transfer and Liquid Spill Pick-Up System

▲ **Drum Devil Model 90600**
fills a 55 gallon in 90 seconds with standard shop air of 80 psi. The Model 90600 Drum Devil System includes all accessories needed to go to work immediately: a Stainless Steel Drum Devil unit, 10' hose with tapered PVC couplings, 90° cam plug drum adapter, extensions tubes, crevice tool, skimmer tool, and squeegee. ***Components also sold separately.***

Beats shop vacuums on reliability, performance, longevity and price

The AiRTX Vacuum System Advantages

- Larger tank capacity than industrial shop vacuums
- Eliminates double handling of toxic materials and emptying vacuum canister
- Eliminates need for "floor dry" absorbent
- No efficiency loss after each use unlike electric-powered shop vacuums
- The Drum Devil and Drum Devil II are made of stainless steel
- The Drum Devil and Drum Devil II have automatic float valve to prevent overfilling
- Both Model 90600 and 90650 easily pick up high viscosity liquids, chips & sludge
- Both Model 90600 and 90650 are safe in wet areas requiring no electricity

▲ **Spill Pick-Up** *Drum Devil Model 90600 Squeegee operation works on smooth or rough surface.*

AiRTX Drum Devil II™ Model 90650

The Smart Two-Way Liquid Transfer and Liquid Spill Pick-Up System

▲ **Drum Devil II Model 90650**
(Two-way liquid transfer) Both fills and/or empties a 55 gallon drum in less than 2 minutes. Easily switches from vacuum mode, filling the container, to empty mode by turning knob on the top of the unit.

Both Fills and Empties a container

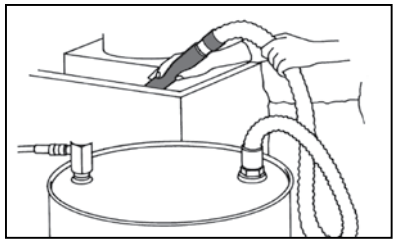

Metalworking

The Model 90650 Drum Devil II easily pulls sludge, oil, coolant or wet chips into drums for convenient handling and disposal.

▼ **Model 90650 Drum Devil II Kit Accessories** *All items available separately*

		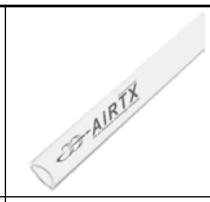	
▲ **Model 90500-13** *Squeegee*	▲ **Model 90500-14** *Smooth Hose Wall*	▲ **Model 90500-15** *Liquid Exhaust Tube*	▲ **Model 90500-16** *Drum Connection Plug*
▲ **Model 90500-17** *Locking Hose Cam*	▲ **Model 90403** *19" Pick-Up Wand*	▲ **Model 90405** *Crevice Tool*	▲ **Model 90407** *Skimmer*

AiRTX SpeedVac™

SpeedVac Workstation Cleaner Gives Shop Vacuum Results Without Electricity or Hassle — Vacuum and Blow Gun in One Unit

▲ SpeedVac Only
Model 90401

The AiRTX SpeedVac Advantages

- Compact, lightweight and low cost
- No electric motor
- No moving parts
- No clumsy canister to empty
- Powerd by ordinairy compressed air
- It can vacuum wet chips or dry matter directly into an open container
- It switches from vacuum to blow mode with a simple reverse of the air chamber.
- The trigger switch is used for on/off.

▲ **The Model 90400 system includes:**

One SpeedVac Gun, 10′ hose x 1-1/4", two extension tubes, skimmer, 3" round brush, and crevice tool.

▼ **Model 90400 SpeedVac Kit Accessories**

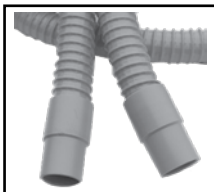			
▲ **Model 90402** *10′ x 1 1/4" Hose*	▲ **Model 90411** *11" Pick-Up Wand*	▲ **Model 90407** *Skimmer*	▲ **Model 90404** *Round Brush*
▲ **Model 90405** *Crevice Tool*	▲ **Model 90412** *5 Gallon Cover*	▲ **Model 90410** *3 Gallon Cloth Bag with Shoulder Strap*	▲ **Model 90403** *19" Pick-Up Wand*

All items available separately

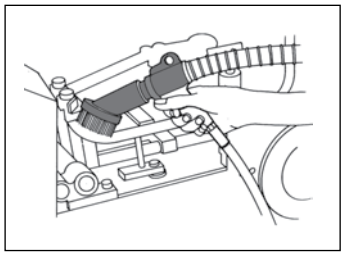

Printing

Frequent clean-ups of offset powder improve product quality and the work environment near printing presses. Clean-up is easy and convenient with the SpeedVac Model 90400.

AiRTX HoleVac™

HoleVac use for Cleaning deep holes

◀ **HoleVac™ Model 90420**
Use for removing debris from deep holes and vacuuming material into a bag or container

Call the AiRTX Air Line
for Free Technical Support
1-800-307-7475
E-mail Us at
sales@airtx.com
Visit Our Website at
airtx.com

AiRTX ConveyVac™

In-line Dry Material Conveying for Heavy Duty Industrial Applications

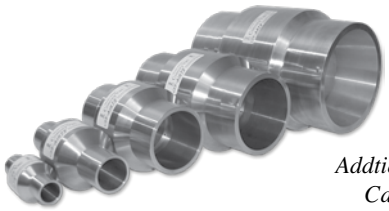

Addtional size available
Call for more info
1-800-3077475

▲ **ConveyVac** *Dry material transfer and conveying high vacuum and air flow for dry material inline transfer and conveying*

Advantages of ConveyVac

- No maintenance
- Quiet operation
- 5 sizes available in both Aluminum and Stainless Steel
- Compressed air operated
- Fits standard PVC pipe sizes
- Heavy duty industrial use
- 6.25" Hg vacuum on Model 98008 @80 psi

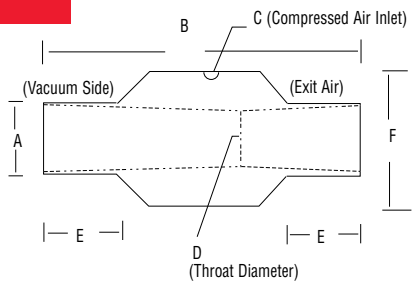

ConveyVac Dimensions

Aluminum Model	Stainless Model	A		B	C	D	E	F	Air Consumption @80 psi
		inch	mm						
98004	90004	0.75"	19	2.8"	1/8" NPT	3.75"	.50	.42"	variable set @15 cfm
98008	90008	1"	25	3.5"	1/4" NPT	.80"	1"	1.50"	28 cfm
98012	90012	1.5"	38	5.7"	1/4" NPT	1.25"	1.5"	2.75"	28 cfm
98022	90022	3"	75	6"	3/8" NPT	2.25"	1.5"	4.00"	32 cfm
98032	90032	4"	100	8"	1/2" NPT	3.25"	2"	5.00"	42 cfm
98042	90042	6"	150	10"	1/2" NPT	4.25"	2"	7.00"	52 cfm

AiRTX StrongMan ConveyVac™ Material Transport

100% HIGHER VACUUM, HIGH TEMPERATURE, THREADED

Dry material transfer and conveying high vacuum and air flow for dry material inline transfer and conveying

▲ **StrongMan High Performance ConveyVac Model 98108**

The AiRTX ConVeyVac Advantages

- Twice the Vacuum
- High Temperature, Higher Air Flows
- Threaded Connections (3 sizes available)
- 5 sizes available in both Aluminum and Stainless Steel
- 12" Hg vacuum on Model 98008@80 psi
- Compressed air operated
- Fits standard PVC pipe sizes
- Conveying dry materials quickly and over long distances

Use ConveyVac For

- In-Line Conveyer Vacuum
- Convey chips, parts, trim scrap, finished goods, pills, pellets, and golf balls
- Boost air flow in existing vacuuum system
- Model 98108 will lift 30 pounds of sand per minute

In-Line Application

ConveyVac Dimensions

Aluminum Model	Stainless Model	A		B	C	D	E	F	Air Consumption @80 psi
		inch	mm						
98108	90208	1"	25	3.5"	1/4" NPT	.80"	1"	1.50"	56 cfm
98112	90212	1.5"	38	5.7"	1/4" NPT	1.25"	1.5"	2.75"	60 cfm
98122	90222	3"	75	6"	3/8" NPT	2.25"	1.5"	4.00"	92 cfm
98132	90232	4"	100	8"	1/2" NPT	3.25"	2"	5.00"	110 cfm
98142	90242	6"	150	10"	1/2" NPT	4.25"	2"	6.00"	118 cfm

AiRTX Adjustable Flow HopperVac™

Pellet and Material Transfer- Operates at a Small Fraction of the cost for Motor Driven Hopper Loaders

▲ HopperVac Model 95308

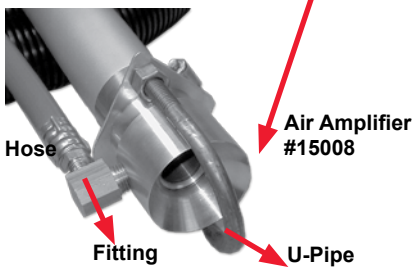

HopperVac Kit Model 95308 Contains

- Variable air flow amplifier #15008
- 3' x 1-1/2" aluminum feed tube
- 10' x 1-1/2" flexible hose
- Hopper feed aluminum hanger tube
- On/off ball valve

The AiRTX HopperVac Advantages

- Low cost — high output
- Hook up to a compressed air line, drop it into a container of pellets and let the HopperVac do the work
- Compressed air operation
- No maintenance
- No break downs or down time
- Variable feed rate up to 50 pounds/min.
- .80" throat diameter

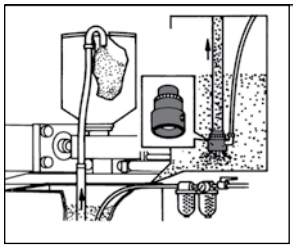

Model 95308

A Model 95308 is a simple, inexpensive way to load plastic granules in a machine hopper. Changing colors or materials is as easy as lifting the 95308 into a different gaylord.

CONVERSION TABLES

LENGTH				
Centimeters- cm.	x	0.394	=	Inches
Feet- ft.	x	30.48	=	Centimeters
	x	0.3048	=	Meters
Inches-in.	x	2.54	=	Centimeters
Inches-in.	x	0.254	=	Milimeters
Meters-m	x	3.281	=	Feet
	x	39.37	=	Inches

Cubic centimeters cu cm or cm3	x	0.06102	=	Cubic Inches
Cubic Feet - cu ft.	x	28320	=	Cubic centimeters
Cubic Inches- cu in.	x	16.29	=	Cubic centimeters

Kilograms-kg	x	2.205	=	Pounds
Pounds- lb	x	453.6	=	Grams
FLOW RATE				
1.000 SCFM	x	2.857	x	1 Nl/min

FROM	TO	lit/sec	gal/min	ft3/sec	ft3/min
lit/sec		1	15.85	0.0353	2.119
gal/ min		0.0631	1	0.00223	0.1337
ft3/sec		28.32	448.8	1	60
ft3/min		0.4719	7.481	0.0167	1

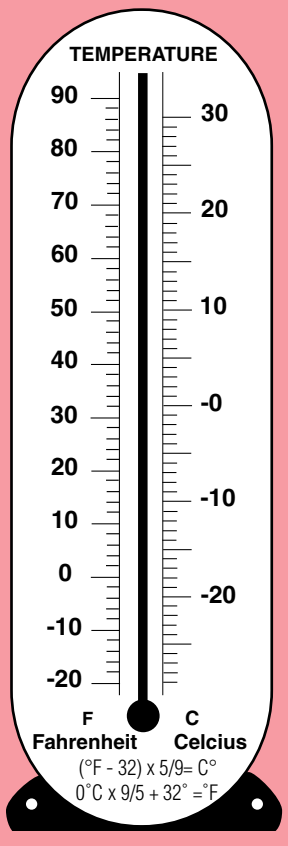

VACUUM PRODUCTS

Call the AiRTX Air Line for Free Technical Support
1-800-307-7475
E-mail Us at
sales@airtx.com
Visit Our Website at
airtx.com

AiRTX Accessories

AIR FILTERS

Model	Description
90175	1/4" Inlet, 75 CFM, 5 Micron, Auto Drain Air Filter
90176	3/8" Inlet, 140 CFM, 5 Micron, Auto Drain Air Filter
90180	1/2" Inlet, 170 CFM, 5 Micron, Auto Drain Air Filter
90185	3/4" Inlet, 140 CFM, 5 Micron, Auto Drain Air Filter
90190	1/4" Inlet, 75 CFM, 5 Micron, Manual Drain Air Filter
90200	1/2" Inlet, 170 CFM, 5 Micron, Manual Drain Air Filter

FILTER - OIL COALESCING

Model	Description
91173	3/8" Inlet, 34 CFM, 0.01 Ppm Auto Drain
91174	1/2" Inlet, 60 CFM, 0.01 Ppm Auto Drain
91175	3/4" Inlet, 100 CFM, 0.01 Ppm Auto Drain
91176	1" Inlet, 125 CFM, 0.01 Ppm Auto Drain

AIR FILTERS/REGULATOR COMBINATION

Model	Description
90215	3/4" Inlet, 140 CFM, 5 Micron with Gauge, Manual Drain
90220	1/2" Inlet, 170 CFM, 5 Micron with Gauge, Automatic Drain
90225	1/2" Inlet, 170 CFM, 5 Micron with Gauge, Manual Drain
90230	1/4" Inlet, 75 CFM, 5 Micron with Gauge, Manual Drain
90235	1/4" Inlet, 75 CFM, 5 Micron with Gauge, Automatic Drain
90240	1/8" Inlet, 70 CFM, 5 Micron with Gauge, Automatic Drain

REGULATORS WITH PRESSURE GAUGE

Model	Description
90280	1/2" NPT Inlet, 170 CFM With Gauge
90285	1/4" Pressure Gauge, Back Connector, 2" Dial

THERMOSTAT

90300	Adjustable Thermostat, Preset At 90°F 32°C

SOLENOID VALVES

Model	Description
90301	1/4" Inlet, Normally Closed 35 CFM, 110V AC
90301-1	1/4" Inlet, Normally Closed 35 CFM, 220V AC
90302	3/8" Inlet, Normally Closed 75 CFM, 110V AC
90302-1	3/8" Inlet, Normally Closed 75 CFM, 220V AC
90303	1/2" Inlet, Normally Closed 100 CFM, 110V AC
90303-1	1/2" Inlet, Normally Closed 100 CFM, 220V AC
90301-6	1/4" Inlet, Normally Closed 35 CFM, 24V DC
90302-6	3/8" Inlet, Normally Closed 75 CFM, 24V DC
90303-6	1/2" Inlet, Normally Closed 100 CFM, 24V DC
90303-7	1/2" Inlet, Normally Closed 35 CFM, 120V DC
90301-9	1/4" Inlet, Normally Closed 35 CFM, Explosion Proof 110V AC

SNAP FLEX HOSE

Model	Description
90602	1/4" x 12" Snap Flex Hose
90603	1/4" Round Nozzle
90604	1/4" x 1" Wide Flare Jet
90606	1/4" Y Junction
90607	1/4" Male Connector
90608	1/2" x 12" Snap Flex Hose
90609	1/2" Round Nozzle
90610	1/2" x 1 1/4" Wide Flare Jet
90611	1/2" x 2 1/2" Wide Flare Jet
90612	1/2" Y Junction
90613	1/2" Male Connector
90614	1/2" x 1/4" Y Reducer
90615	1/4" Assembly Hand Tool
90616	1/2" Assembly Hand Tool
90620	1/2" Nozzle For Stainless Airgun Model # 60015, 60051
90601	1/2" Connector With 1/4" Dual Point Hose and Nozzles
90601-1	3/8" Connector With 1/4" Dual Point Hose and Nozzles

Locking Swivel Fitting Model # 38006-3 for use with AiRTX Nozzles and Wedges (shown with Air Saver Nozzle Model # 48009)

Automatic 5 Micron Air Filter

Manual 5 Micron Air Filter

Filter-Oil Coalescing

Air Filter/Regulator

Air Filter/Regulator

Regulators/Pressure Gauge

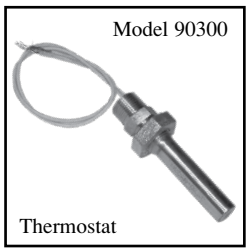

Model 90300 Thermostat

Solenoid Valve

Model 90613 1/2" Male Connector

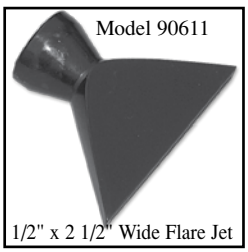

Model 90611 1/2" x 2 1/2" Wide Flare Jet

Model 90612 1/2" Y Junction

Model 90615 1/4" Assembly Hand Tool

Model 90620 1/2" Nozzle For Stainless Airgun Model # 60015, 60051

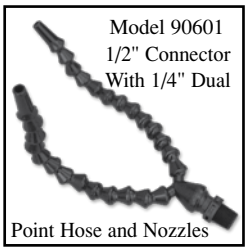

Model 90601 1/2" Connector With 1/4" Dual Point Hose and Nozzles

Compressed Air Solutions For Industrial Applications

AUTOMOTIVE FOODPROCESSING CHEMICAL PROCESSING METALWORKING TEXTILES

airtx.com

Home

- Industry Solutions
  - Metalworking
  - Plastics
  - Woodworking
  - Chemical Processing
  - Electronics
  - Food Processing
  - Packaging
- COOLING & HEATING
- BLOW-OFF PRODUCTS
- STATIC CONTROL
- INDUSTRIAL VACUUM SYSTEMS
  - Company Info
  - Contact Us
  - View Chart/Check Out

Industrial Vacuum Sytems - StrongMan™ gets the Job Done

Solve your Static Charge - 20% more Ions than other Suppliers

Powerful Blow-Off with Lower Air Cost - 50:1 Air Amplification

Electronics Cooling without FREON

Toll Free: 1-800-307-7475

www.airtx.com

sales@airtx.com

Here's the Catalog You Requested

Please Route to:

Production Manager
Maintenance Manager
Engineering Manager
Safety Manager
Q & A Manager
R & D Manager

International AIRTX
The Air Research Technology Company

6320 Wiehe Road
CINCINNATI, OHIO 45237
Phone: 513-631-0660
Fax: 513-631-3111
Toll Free: 1-800-307-7475